DANVILLE ACCESSORY DWELLING UNITS (STUDIO) (MEDITERRANEAN STYLE)

TOWN OF DANVILLE USE ONLY

PROJECT DIR.

ARCHITECT
WILLIAM WOOD ARCHITECTS
301 HARTZ AVENUE, STE. 203
DANVILLE, CA 94526
(925) 820-8233
CONTACT: BILL WOOD

STRUCTURAL ENGINEER
ADVANCED ENGINEERING
3361 WALNUT BLVD. SUITE 100
BRENTWOOD, CA. 94513
(925) 516-3502
CONTACT: JUSTEN PEEK

TITLE 24 CALCULATIONS
ADVANCED ENGINEERING
3361 WALNUT BLVD. SUITE 100
BRENTWOOD, CA. 94513
(925) 516-3502
CONTACT: JASON BENNETT

BUILDING DATA

FLOOR AREA:

STUDIO FLOOR AREA 640 S.F.

SETBACKS:

REAR 4'-0" MIN.
SIDES 4'-0" MIN.
(NOTE: SEE FLOOR PLAN AND ROOF PLAN FOR FIRE RATED EXTERIOR WALLS THAT ARE CLOSER THAN 5' TO PROPERTY LINE)

OCCUPANCY GROUP

R-3

TYPE OF CONSTRUCTION

V-B

FIRE SPRINKLERS:

THE ADU SHALL BE REQUIRED TO BE EQUIPPED WITH FIRE SPRINKLERS IF THE EXISTING RESIDENCE IS SPRINKLERED.

APPLICABLE CODES

2022 CALIFORNIA BUILDING CODE
2022 CALIFORNIA RESIDENTIAL CODE
2022 CALIFORNIA GREEN BUILDING STANDARDS CODE
2022 CALIFORNIA MECHANICAL CODE
2022 CALIFORNIA ELECTRICAL CODE
2022 CALIFORNIA PLUMBING CODE
2022 CALIFORNIA FIRE CODE
2022 CALIFORNIA ENERGY CODE
TOWN OF DANVILLE MUNICIPAL CODE

TOWN OF DANVILLE NOTES

- ALL PERMITS EXCEEDING $1,000.00 IN VALUATION SHALL REQUIRE INSTALLATION OF APPROVED SMOKE AND CARBON MONOXIDE DETECTORS WITHIN THE DWELING.

- ALL PERMITS EXCEEDING $10,000.00 IN VALUATION SHALL REQUIRE THE INSTALLATION OF AN APPROVED AUTOMATIC GAS SHUT-OFF DEVICE ON THE CUSTOMER OWNED PIPING AT THE UTILITY METER.

- BUILDING ADDRESS NUMBERS MUST BE A MINIMUM OF 4" IN HEIGHT OR 3 INCHES IN HEIGHT AND SELF-ILLUMINATED.

- THE TOWN'S CONSTRUCTION AND DEMOLITION ORDIANCE (C&D) APPLIES.

INDEX TO DRAWINGS

CS1	COVER SHEET
GN1	GENERAL NOTES
GN2	CALGREEN RESIDENTIAL MANDATORY MEASURES CHECKLIST
GN3	CALGREEN RESIDENTIAL MANDATORY MEASURES CHECKLIST
EC	TITLE 24 CALCULATIONS
ECM	TITLE 24 LOW RISE MANDATORY MEASURES
ECS	TITLE 24 SUMMARY OF FEATURES
SN1	STRUCTURAL NOTES
SN2	STRUCTURAL NOTES
S1	FOUNDATION AND ROOF FRAMING PLANS
SD1	SHEARWALL SCHEDULE, HOLDOWN SCHEDULE AND TYPICAL DETAILS
SD2	TYPICAL CONCRETE AND CARPENTRY DETAILS
SD3	FOUNDATION DETAILS SLAB ON GRADE
SD4	ROOF FRAMING PLAN
A2	FLOOR PLAN, ROOF PLAN AND REFLECTED CEILING PLAN
A3	EXTERIOR ELEVATIONS (MEDITERRANEAN STYLE)
A4	ELECTRICAL/MECHANICAL PLAN

PLAN SET ID NAME
S-ME-R-P

REVISIONS	DATE

LICENSED ARCHITECT
WILLIAM A. WOOD
C 13874
Jan. 31, 2025
REN. DATE
STATE OF CALIFORNIA

DANVILLE ACCESSORY DWELLING UNITS - STUDIO

DANVILLE CA 94526

WILLIAM WOOD ARCHITECTS
301 HARTZ AVENUE, SUITE 203
DANVILLE, CALIFORNIA 94526
(925) 820-8233

THIS IS AN ORIGINAL, UNPUBLISHED WORK, AND MAY NOT BE DUPLICATED, PUBLISHED, OR OTHERWISE USED WITHOUT WRITTEN CONSENT OF WILLIAM WOOD ARCHITECTS.

COPYRIGHT © WILLIAM WOOD ARCHITECTS, 2023

DRAWN
JJ
CHECKED
WW
DATE
03-30-23
SCALE
AS SHOWN
JOB NO.
20.921R
SHEET
CS1
OF SHEETS

Apr 26, 2023 - 4:03pm CS1 Cover Sheet studio Mediterranean style.dwg

GENERAL NOTES

2022 CALIFORNIA BUILDING CODE
2022 CALIFORNIA RESIDENTIAL CODE
2022 CALIFORNIA GREEN BUILDING STANDARDS CODE
2022 CALIFORNIA MECHANICAL CODE
2022 CALIFORNIA ELECTRICAL CODE
2022 CALIFORNIA PLUMBING CODE
2022 CALIFORNIA FIRE CODE
2022 CALIFORNIA ENERGY CODE
TOWN OF DANVILLE MUNICIPAL CODE

1. All materials, workmanship and methods of construction shall conform to the requirements of the 2022 codes listed above. The Contractor is required to incorporate whatever changes or additional work these codes or regulations require without additional cost to the Owner.
2. Do not scale drawings. Written dimensions shall always take precedence over scale dimensions. Dimensions shown on floor plans are to face of stud unless otherwise noted or indicated.
3. Notify the Architect of any discrepancies in the Documents or between the Documents and the existing conditions before proceeding with any work.
4. The Contractor shall obtain all required inspections for his work and give the Owner timely notice of his intent to have inspections.
5. The Contractor and/or Subcontractor shall at all times keep the premises free of accumulations of waste materials or rubbish caused by his employees or work. At the completion of the work, he shall remove all his rubbish, all of his tools, scaffolding, and surplus materials from and about the building and shall leave his work "broom clean" or its equivalent.
6. Contractor to coordinate and verify all sizes of kitchen appliances, to be selected by the Owner, and the style of the design, materials, hardware and finish of the cabinets with the Owner and cabinet-maker prior to manufacturing.
7. The escape opening has a minimum net clear opening of 5.7 square feet; minimum net clear opening height of 24 inches; and minimum net clear opening width of 20 inches. Maximum sill height to be 44" where windows are provided as means of escape or rescue.
8. All ICC evaluation reports and manufacturer specifications for fireplaces and skylights to be provided by Contractor and approved by the TOWN OF DANVILLE prior to plan installation.
9. Contractor to verify size and clearances of selected water heater and furnace for adequacy of space shown on the drawings prior to construction. Notify Architect immediately of any conflicts with space requirements for this equipment.
11. All shower and tub/shower enclosures to be provided with smooth, hard, nonabsorbent finish backing (e.g., tile over W.R. Board to 70" above drain).
12. Handrails & Guardrails: Stairways to have handrails on open side of stairs, not less than 34" nor more than 38" above the nosing treads. They should be continuous the full length of the stairs and need not extend 12" beyond top and 12" plus tread width beyond bottom tread. Ends shall be returned or shall terminate in newel posts or safety terminals. Handgrip shall not be less than 1 $\frac{1}{4}$"or more than 2" in cross-sectional dimension w/ no sharp corners, height of 34 inches to 38 inches above nosing, extend continuously from top to bottom risers, and terminate at newel posts or return to walls; handgrip shall have a space not less than 1½" out from the wall. Open guardrail and stair railings shall have intermediate rails or an ornamental pattern such that a sphere 4" in diameter cannot pass through. All interior and exterior handrails and guardrails to conform to 2022 CRC. Guardrails shall be designed to withstand a 200-pound load applied in any direction at any point along the top rail per 2022 CRC.
13. Maximum 3.5-inch handrail projection into the required stair width. Stringers and other projections such as trim are limited to 1- $\frac{1}{2}$ inches on each side.
14. Handrail(s) is required for stairways with four or more risers.
16. Batt insulation shall have maximum flame spread of 25 and smoke development of 450. .
17. The Contractor will read and conform to the Title 24 requirements for this project. A copy of Title 24 documents can be obtained from the Owner.
18. Glass & glazing to comply with 2022 CRC.
19. Discrepancies: In the event of conflict or discrepancy in contract documents, larger quantity and higher quality shall govern unless Architect approval is given in writing.

Site & Grading Notes
1. The site plan drawing is not a property survey. All information shown in regard to boundaries of property was taken from the County Assessor's maps. The Architect does not accept responsibility for the accuracy of the data presented and drawn. The Contractor is to hire and pay for a licensed surveyor to locate the property line adjacent to the addition prior to the start of construction.
2. Non-removable backflow prevention to be provided at meter and provide non-removable vacuum breaker on all hose bibbs.
3. All utilities to be field verified by contractor. William Wood Architects assume no responsibility for accuracy of utility locations, as shown on plans.
4. Restore all existing building and site improvements, including sidewalks, curb and gutters, walks, patios, fences, landscaping, sprinklers, plumbing, etc., which have been altered or damaged by reason of the contractor's operations to a new condition, to the complete satisfaction of the owner.
5. Work to comply with TOWN OF DANVILLE ordinance for setbacks and grading requirements as shown on the site plan.
6. All downspouts, site area drains and catch basins as shown on site plan shall be collected with PVC tight line rigid wall, independent of all other drainage systems.
7. All retaining walls shall have drainage with 4" perforated PVC rigid wall and collected with PVC Tight line rigid wall.
8. A positive gradient shall be provided away from the foundation in order to provide rapid removal of the surface water runoff away from the foundation to an adequate discharge point. The grade shall fall a minimum of 6" within the first 10' measured perpendicular to the face of the foundation wall per CRC R401.3.

General Construction Notes:
1. Gypsum drywall systems with fire-resistance ratings where indicated or required are to comply with governing regulations. Provide materials and installations identical with applicable assemblies that have been tested and listed by recognized authorities, including UL. Comply with FM approval Guide where applicable.

Foundation Notes:
See structural drawing for foundation notes.

Framing Notes:
See Structural Drawings for framing notes:

Plumbing Notes
1. Showerheads shall be flow control of 1.8 G.P.M. or less.
2. All lavatory faucets shall be flow control of 1.2 G.P.M. or less.
3. Kitchen faucet to be 1.8 gallons per minute, maximum.
4. Water closet to be 1.28 gallson per flush maximum. or dual flush per CPC 411.2.
5. All piping and equipment shall be supported as per section 313 in the CPC.
6. Seismic restraint requirements for all piping and equipment (including gas lines and fuel fired equipment) shall be installed per CBC 1613.1 and Chapter 13 of ASCE7-16.
6. All backflow prevention devices shall be installed per CPC 603.3.
7. All potable and non-potable (closed loop fire sprinkler system) water piping is to be clearly identified as per the requirements of CPC 601.2.
8. Hose bibs shall be protecrted with a nonremovable hose-bib0-type backflow preventer, a non removable hose-bib-type vacum breaker or by an atmospheric vacum breaker installed not less than 6 inches above the highest point of usage located on the discharge side of the last valve. CPC 603.5.7.

Electrical and Mechanical Notes:
1. Electrical receptacles in bathrooms, outdoors and within 6'-0" of sink to be on ground fault protection (G.F.I.);
2. Provide 1/2-switched outlet under counter at sink for disposal.
4. Switch and duplex outlet, or multiple switches shown adjacent to each other on plan are to be under one plate.
5. New 110v smoke detector(s), with battery backup, and interconnected, which are audible in all sleeping area will be provided at the following locations: (1) all new bedrooms; (2) in hallways and immediately adjacent to new bedrooms.
6. All appliances shall conform to the standards set forth by the California Energy Commission Title 24 requirements.
7. Gas fired cooking appliances and space-heating equipment shall have intermittent ignition devices.
8. All air ducts penetrating separation wall or ceiling between garage and living area shall be 26 GA. The ducts, plenums, A/C coil boxes must be insulated to R4 minimum and be of 26 ga. sheetmetal in the garage.
9. Contractor to verify space requirements for plenums and ducts prior to start of work.
10. Mechanical ventilation shall be capable of providing five air changes per hour in lieu of the natural ventilation in bathrooms, water closet compartments and laundry rooms and vented directly to the outside. All exhaust fans and fan systems to have damper controls.
11. Gaskets to be provided at exterior receptacles and switch plates.
12. Final locations of all mechanical and electrical equipment, panel boards, meters, fixtures, flues, vents, switches etc., shall be approved by Owner prior to installation.
13. Lights: All lights shall be high efficency.
14. HVAC equipment, water heaters, showerheads and faucets to be certified by the CEC.
15. Provide a setback thermostat on all applicable heating systems.
16. Ducts penetrating the one-hour separation between garage and the house shall be not less than 26 gauge galvanized steel.
17. The HVAC equipment shown meets the assumed efficiency requirements of this compliance, however, it is recommended that the actual system to be installed be determined by an HVAC designer. The loads shown are only one of the criteria affecting the selection of HVAC equipment. Other relevant design factors such as airflow requirements, outdoor design temperatures, coil sizing, availability of equipment, oversizing safety margin, etc., must also be considered. It is the HVAC designer's responsibility to consider all factors when selecting the HVAC equipment.
18. Fused disconnect at A/C compressor unit or approved circuit breaker to be installed.
19. Clothes dryer, vented range hoods, and bathroom vent fans must be exhausted to outside per 2022 CMC.
20. Install new receptacle outlets as specified in NEC.
21. Provide a dedicated 20-amp branch circuit to supply the laundry receptacle outlet.
22. Contractor to provide additional electrical load as necessary to equip all new & existing elect. equipment.

TOWN OF DANVILLE USE ONLY

	REVISIONS	DATE

LICENSED ARCHITECT
WILLIAM A. WOOD
C 13874
Jan. 31, 2025
REN. DATE
STATE OF CALIFORNIA

DANVILLE ACCESSORY DWELLING UNITS - STUDIO

DANVILLE CA 94526

WILLIAM WOOD
ARCHITECTS
301 HARTZ AVENUE, SUITE 203
DANVILLE, CALIFORNIA 94526
(925) 820-8233

THIS IS AN ORIGINAL, UNPUBLISHED WORK, AND MAY NOT BE DUPLICATED, PUBLISHED, OR OTHERWISE USED WITHOUT WRITTEN CONSENT OF WILLIAM WOOD ARCHITECTS.

COPYRIGHT © WILLIAM WOOD ARCHITECTS, 2023

Apr 26, 2023 - 4:05pm GN1 Gen Notes.dwg

DRAWN	EJL
CHECKED	WW
DATE	03-30-23
SCALE	AS SHOWN
JOB NO.	20.921R
SHEET	GN1
OF	SHEETS

AIA California

2022 CALIFORNIA GREEN BUILDING STANDARDS CODE
RESIDENTIAL MANDATORY MEASURES, SHEET 1 (January 2023)

Y = YES
N/A = NOT APPLICABLE
RESPON. PARTY = RESPONSIBLE PARTY (ie: ARCHITECT, ENGINEER, OWNER, CONTRACTOR, INSPECTOR ETC.)

CHAPTER 3
GREEN BUILDING
SECTION 301 GENERAL

301.1 SCOPE. Buildings shall be designed to include the green building measures specified as mandatory in the application checklists contained in this code. Voluntary green building measures are also included in the application checklists and may be included in the design and construction of structures covered by this code, but are not required unless adopted by a city, county, or city and county as specified in Section 101.7.

301.1.1 Additions and alterations. [HCD] The mandatory provisions of Chapter 4 shall be applied to additions or alterations of existing residential buildings where the addition or alteration increases the building's conditioned area, volume, or size. The requirements shall apply only to and/or within the specific area of the addition or alteration.

The mandatory provision of Section 4.106.4.2 may apply to additions or alterations of existing parking facilities or the addition of new parking facilities serving existing multifamily buildings. See Section 4.106.4.3 for application.

Note: Repairs including, but not limited to, resurfacing, restriping and repairing or maintaining existing lighting fixtures are not considered alterations for the purpose of this section.

Note: On and after January 1, 2014, residential buildings undergoing permitted alterations, additions, or improvements shall replace noncompliant plumbing fixtures with water-conserving plumbing fixtures. Plumbing fixture replacement is required prior to issuance of a certificate of final completion, certificate of occupancy or final permit approval by the local building department. See Civil Code Section 1101.1. et seq., for the definition of a noncompliant plumbing fixture, types of residential buildings affected and other important enactment dates.

301.2 LOW-RISE AND HIGH-RISE RESIDENTIAL BUILDINGS. [HCD] The provisions of individual sections of CALGreen may apply to either low-rise residential buildings high-rise residential buildings, or both. Individual sections will be designated by banners to indicate where the section applies specifically to low-rise only (LR) or high-rise only (HR). When the section applies to both low-rise and high-rise buildings, no banner will be used.

SECTION 302 MIXED OCCUPANCY BUILDINGS

302.1 MIXED OCCUPANCY BUILDINGS. In mixed occupancy buildings, each portion of a building shall comply with the specific green building measures applicable to each specific occupancy.
Exceptions:
1. [HCD] Accessory structures and accessory occupancies serving residential buildings shall comply with Chapter 4 and Appendix A4, as applicable.
2. [HCD] For purposes of CALGreen, live/work units, complying with Section 419 of the *California Building Code*, shall not be considered mixed occupancies. Live/Work units shall comply with Chapter 4 and Appendix A4, as applicable.

DIVISION 4.1 PLANNING AND DESIGN

ABBREVIATION DEFINITIONS:

HCD	Department of Housing and Community Development
BSC	California Building Standards Commission
DSA-SS	Division of the State Architect, Structural Safety
OSHPD	Office of Statewide Health Planning and Development
LR	Low Rise
HR	High Rise
AA	Additions and Alterations
N	New

CHAPTER 4
RESIDENTIAL MANDATORY MEASURES

SECTION 4.102 DEFINITIONS
4.102.1 DEFINITIONS
The following terms are defined in Chapter 2 *(and are included here for reference)*

FRENCH DRAIN. A trench, hole or other depressed area loosely filled with rock, gravel, fragments of brick or similar pervious material used to collect or channel drainage or runoff water.

WATTLES. Wattles are used to reduce sediment in runoff. Wattles are often constructed of natural plant materials such as hay, straw or similar material shaped in the form of tubes and placed on a downflow slope. Wattles are also used for perimeter and inlet controls.

4.106 SITE DEVELOPMENT
4.106.1 GENERAL. Preservation and use of available natural resources shall be accomplished through evaluation and careful planning to minimize negative effects on the site and adjacent areas. Preservation of slopes, management of storm water drainage and erosion controls shall comply with this section.

4.106.2 STORM WATER DRAINAGE AND RETENTION DURING CONSTRUCTION. Projects which disturb less than one acre of soil and are not part of a larger common plan of development which in total disturbs one acre or more, shall manage storm water drainage during construction. In order to manage storm water drainage during construction, one or more of the following measures shall be implemented to prevent flooding of adjacent property, prevent erosion and retain soil runoff on the site.

1. Retention basins of sufficient size shall be utilized to retain storm water on the site.
2. Where storm water is conveyed to a public drainage system, collection point, gutter or similar disposal method, water shall be filtered by use of a barrier system, wattle or other method approved by the enforcing agency.
3. Compliance with a lawfully enacted storm water management ordinance.

Note: Refer to the State Water Resources Control Board for projects which disturb one acre or more of soil, or are part of a larger common plan of development which in total disturbs one acre or more of soil.

(Website: https://www.waterboards.ca.gov/water_issues/programs/stormwater/construction.html)

4.106.3 GRADING AND PAVING. Construction plans shall indicate how the site grading or drainage system will manage all surface water flows to keep water from entering buildings. Examples of methods to manage surface water include, but are not limited to, the following:

1. Swales
2. Water collection and disposal systems
3. French drains
4. Water retention gardens
5. Other water measures which keep surface water away from buildings and aid in groundwater recharge.

Exception: Additions and alterations not altering the drainage path.

4.106.4 Electric vehicle (EV) charging for new construction. New construction shall comply with Sections 4.106.4.1 or 4.106.4.2 to facilitate future installation and use of EV chargers. Electric vehicle supply equipment (EVSE) shall be installed in accordance with the *California Electrical Code*, Article 625.

Exceptions:
1. On a case-by-case basis, where the local enforcing agency has determined EV charging and infrastructure are not feasible based upon one or more of the following conditions:
   1.1 Where there is no local utility power supply or the local utility is unable to supply adequate power.
   1.2 Where there is evidence suitable to the local enforcing agency substantiating that additional local utility infrastructure design requirements, directly related to the implementation of Section 4.106.4, may adversely impact the construction cost of the project.
2. Accessory Dwelling Units (ADU) and Junior Accessory Dwelling Units (JADU) without additional parking facilities.

4.106.4.1 New one- and two-family dwellings and townhouses with attached private garages. For each dwelling unit, install a listed raceway to accommodate a dedicated 208/240-volt branch circuit. The raceway shall not be less than trade size 1 (nominal 1-inch inside diameter). The raceway shall originate at the main service or subpanel and shall terminate into a listed cabinet, box or other enclosure in close proximity to the proposed location of an EV charger. Raceways are required to be continuous at enclosed, inaccessible or concealed areas and spaces. The service panel and/or subpanel shall provide capacity to install a 40-ampere 208/240-volt minimum dedicated branch circuit and space(s) reserved to permit installation of a branch circuit overcurrent protective device.

Exemption: A raceway is not required if a minimum 40-ampere 208/240-volt dedicated EV branch circuit is installed in close proximity to the proposed location of an EV charger at the time of original construction in accordance with the *California Electrical Code*.

4.106.4.1.1 Identification. The service panel or subpanel circuit directory shall identify the overcurrent protective device space(s) reserved for future EV charging as "EV CAPABLE". The raceway termination location shall be permanently and visibly marked as "EV CAPABLE".

4.106.4.2 New multifamily dwellings, hotels and motels and new residential parking facilities.
When parking is provided, parking spaces for new multifamily dwellings, hotels and motels shall meet the requirements of Sections 4.106.4.2.1 and 4.106.4.2.2. Calculations for spaces shall be rounded up to the nearest whole number. A parking space served by electric vehicle supply equipment or designed as a future EV charging space shall count as at least one standard automobile parking space only for the purpose of complying with any applicable minimum parking space requirements established by a local jurisdiction. See Vehicle Code Section 22511.2 for further details.

4.106.4.2.1Multifamily development projects with less than 20 dwelling units; and hotels and motels with less than 20 sleeping units or guest rooms.
The number of dwelling units, sleeping units or guest rooms shall be based on all buildings on a project site subject to this section.

1.EV Capable. Ten (10) percent of the total number of parking spaces on a building site, provided for all types of parking facilities, shall be electric vehicle charging spaces (EV spaces) capable of supporting future Level 2 EVSE. Electrical load calculations shall demonstrate that the electrical panel service capacity and electrical system, including any on-site distribution transformer(s), have sufficient capacity to simultaneously charge all EVs at all required EV spaces at a minimum of 40 amperes.

The service panel or subpanel circuit directory shall identify the overcurrent protective device space(s) reserved for future EV charging purposes as "EV CAPABLE" in accordance with the California Electrical Code.

Exceptions:

1.When EV chargers (Level 2 EVSE) are installed in a number equal to or greater than the required number of EV capable spaces.

2.When EV chargers (Level 2 EVSE) are installed in a number less than the required number of EV capable spaces, the number of EV capable spaces required may be reduced by a number equal to the number of EV chargers installed.

Notes:

a.Construction documents are intended to demonstrate the project's capability and capacity for facilitating future EV charging.

b.There is no requirement for EV spaces to be constructed or available until receptacles for EV charging or EV chargers are installed for use.

2.EV Ready. Twenty-five (25) percent of the total number of parking spaces shall be equipped with low power Level 2 EV charging receptacles. For multifamily parking facilities, no more than one receptacle is required per dwelling unit when more than one parking space is provided for use by a single dwelling unit.

Exception: Areas of parking facilities served by parking lifts.

4.106.4.2.2 Multifamily development projects with 20 or more dwelling units, hotels and motels with 20 or more sleeping units or guest rooms.
The number of dwelling units, sleeping units or guest rooms shall be based on all buildings on a project site subject to this section.

1.EV Capable. Ten (10) percent of the total number of parking spaces on a building site, provided for all types of parking facilities, shall be electric vehicle charging spaces (EV spaces) capable of supporting future Level 2 EVSE. Electrical load calculations shall demonstrate that the electrical panel service capacity and electrical system, including any on-site distribution transformer(s), have sufficient capacity to simultaneously charge all EVs at all required EV spaces at a minimum of 40 amperes.

The service panel or subpanel circuit directory shall identify the overcurrent protective device space(s) reserved for future EV charging purposes as "EV CAPABLE" in accordance with the California Electrical Code.

Exception: When EV chargers (Level 2 EVSE) are installed in a number greater than five (5) percent of parking spaces required by Section 4.106.4.2.2, Item 3, the number of EV capable spaces required may be reduced by a number equal to the number of EV chargers installed over the five (5) percent required.

Notes:

a.Construction documents shall show locations of future EV spaces.

b.There is no requirement for EV spaces to be constructed or available until receptacles for EV charging or EV chargers are installed for use.

2.EV Ready. Twenty-five (25) percent of the total number of parking spaces shall be equipped with low power Level 2 EV charging receptacles. For multifamily parking facilities, no more than one receptacle is required per dwelling unit when more than one parking space is provided for use by a single dwelling unit.

Exception: Areas of parking facilities served by parking lifts.

3.EV Chargers. Five (5) percent of the total number of parking spaces shall be equipped with Level 2 EVSE. Where common use parking is provided, at least one EV charger shall be located in the common use parking area and shall be available for use by all residents or guests.

When low power Level 2 EV charging receptacles or Level 2 EVSE are installed beyond the minimum required, an automatic load management system (ALMS) may be used to reduce the maximum required electrical capacity to each space served by the ALMS. The electrical system and any on-site distribution transformers shall have sufficient capacity to deliver at least 3.3 kW simultaneously to each EV charging station (EVCS) served by the ALMS. The branch circuit shall have a minimum capacity of 40 amperes, and installed EVSE shall have a capacity of not less than 30 amperes. ALMS shall not be used to reduce the minimum required electrical capacity to the required EV capable spaces.

4.106.4.2.2.1 Electric vehicle charging stations (EVCS).
Electric vehicle charging stations required by Section 4.106.4.2.2, Item 3, shall comply with Section 4.106.4.2.2.1.

Exception: Electric vehicle charging stations serving public accommodations, public housing, motels and hotels shall not be required to comply with this section. See California Building Code, Chapter 11B, for applicable requirements.

4.106.4.2.2.1.1 Location.
EVCS shall comply with at least one of the following options:

1.The charging space shall be located adjacent to an accessible parking space meeting the requirements of the California Building Code, Chapter 11A, to allow use of the EV charger from the accessible parking space.

2.The charging space shall be located on an accessible route, as defined in the California Building Code, Chapter 2, to the building.

Exception: Electric vehicle charging stations designed and constructed in compliance with the California Building Code, Chapter 11B, are not required to comply with Section 4.106.4.2.2.1.1 and Section 4.106.4.2.2.1.2, Item 3.

4.106.4.2.2.1.2 Electric vehicle charging stations (EVCS) dimensions.
The charging spaces shall be designed to comply with the following:

1.The minimum length of each EV space shall be 18 feet (5486 mm).

2.The minimum width of each EV space shall be 9 feet (2743 mm).

3.One in every 25 charging spaces, but not less than one, shall also have an 8-foot (2438 mm) wide minimum aisle. A 5-foot (1524 mm) wide minimum aisle shall be permitted provided the minimum width of the EV space is 12 feet (3658 mm).

a.Surface slope for this EV space and the aisle shall not exceed 1 unit vertical in 48 units horizontal (2.083 percent slope) in any direction.

4.106.4.2.2.1.3 Accessible EV spaces.
In addition to the requirements in Sections 4.106.4.2.2.1.1 and 4.106.4.2.2.1.2, all EVSE, when installed, shall comply with the accessibility provisions for EV chargers in the California Building Code, Chapter 11B. EV ready spaces and EVCS in multifamily developments shall comply with California Building Code, Chapter 11A, Section 1109A.

4.106.4.2.3 EV space requirements.
1.Single EV space required. Install a listed raceway capable of accommodating a 208/240-volt dedicated branch circuit. The raceway shall not be less than trade size 1 (nominal 1-inch inside diameter). The raceway shall originate at the main service or subpanel and shall terminate into a listed cabinet, box or enclosure in close proximity to the location or the proposed location of the EV space. Construction documents shall identify the raceway termination point, receptacle or charger location, as applicable. The service panel and/ or subpanel shall have a 40-ampere minimum dedicated branch circuit, including branch circuit overcurrent protective device installed, or space(s) reserved to permit installation of a branch circuit overcurrent protective device.

Exception: A raceway is not required if a minimum 40-ampere 208/240-volt dedicated EV branch circuit is installed in close proximity to the location or the proposed location of the EV space, at the time of original construction in accordance with the California Electrical Code.

2.Multiple EV spaces required. Construction documents shall indicate the raceway termination point and the location of installed or future EV spaces, receptacles or EV chargers. Construction documents shall also provide information on amperage of installed or future receptacles or EVSE, raceway method(s), wiring schematics and electrical load calculations. Plan design shall be based upon a 40-ampere minimum branch circuit. Required raceways and related components that are planned to be installed underground, enclosed, inaccessible or in concealed areas and spaces shall be installed at the time of original construction.

Exception: A raceway is not required if a minimum 40-ampere 208/240-volt dedicated EV branch circuit is installed in close proximity to the location or the proposed location of the EV space at the time of original construction in accordance with the California Electrical Code.

4.106.4.2.4 Identification.
The service panel or subpanel circuit directory shall identify the overcurrent protective device space(s) reserved for future EV charging purposes as "EV CAPABLE" in accordance with the California Electrical Code.

4.106.4.2.5 Electric Vehicle Ready Space Signage.
Electric vehicle ready spaces shall be identified by signage or pavement markings, in compliance with Caltrans Traffic Operations Policy Directive 13-01 (Zero Emission Vehicle Signs and Pavement Markings) or its successor(s).

4.106.4.3 Electric vehicle charging for additions and alterations of parking facilities serving existing multifamily buildings.
When new parking facilities are added, or electrical systems or lighting of existing parking facilities are added or altered and the work requires a building permit, ten (10) percent of the total number of parking spaces added or altered shall be electric vehicle charging spaces (EV spaces) capable of supporting future Level 2 EVSE.

Notes:

1.Construction documents are intended to demonstrate the project's capability and capacity for facilitating future EV charging.

2.There is no requirement for EV spaces to be constructed or available until EV chargers are installed for use.

DIVISION 4.2 ENERGY EFFICIENCY

4.201 GENERAL
4.201.1 SCOPE. For the purposes of mandatory energy efficiency standards in this code, the California Energy Commission will continue to adopt mandatory standards.

DIVISION 4.3 WATER EFFICIENCY AND CONSERVATION

4.303 INDOOR WATER USE
4.303.1 WATER CONSERVING PLUMBING FIXTURES AND FITTINGS. Plumbing fixtures (water closets and urinals) and fittings (faucets and showerheads) shall comply with the sections 4.303.1.1 ,4.303.1.2, 4.303.1.3, and 4.303.4.4.

Note: All noncompliant plumbing fixtures in any residential real property shall be replaced with water-conserving plumbing fixtures. Plumbing fixture replacement is required prior to issuance of a certificate of final completion, certificate of occupancy, or final permit approval by the local building department. See Civil Code Section 1101.1, et seq., for the definition of a noncompliant plumbing fixture, types of residential buildings affected and other important enactment dates.

4.303.1.1 Water Closets. The effective flush volume of all water closets shall not exceed 1.28 gallons per flush. Tank-type water closets shall be certified to the performance criteria of the U.S. EPA WaterSense Specification for Tank-type Toilets.

Note: The effective flush volume of dual flush toilets is defined as the composite, average flush volume of two reduced flushes and one full flush.

4.303.1.2 Urinals. The effective flush volume of wall mounted urinals shall not exceed 0.125 gallons per flush. The effective flush volume of all other urinals shall not exceed 0.5 gallons per flush.

4.303.1.3 Showerheads.

4.303.1.3.1 Single Showerhead. Showerheads shall have a maximum flow rate of not more than 1.8 gallons per minute at 80 psi. Showerheads shall be certified to the performance criteria of the U.S. EPA WaterSense Specification for Showerheads.

4.303.1.3.2 Multiple showerheads serving one shower. When a shower is served by more than one showerhead, the combined flow rate of all the showerheads and/or other shower outlets controlled by a single valve shall not exceed 1.8 gallons per minute at 80 psi, or the shower shall be designed to only allow one shower outlet to be in operation at a time.

Note: A hand-held shower shall be considered a showerhead.

4.303.1.4 Faucets.

4.303.1.4.1 Residential Lavatory Faucets. The maximum flow rate of residential lavatory faucets shall not exceed 1.2 gallons per minute at 60 psi. The minimum flow rate of residential lavatory faucets shall not be less than 0.8 gallons per minute at 20 psi.

4.303.1.4.2 Lavatory Faucets in Common and Public Use Areas. The maximum flow rate of lavatory faucets installed in common and public use areas (outside of dwellings or sleeping units) in residential buildings shall not exceed 0.5 gallons per minute at 60 psi.

4.303.1.4.3 Metering Faucets. Metering faucets when installed in residential buildings shall not deliver more than 0.2 gallons per cycle.

4.303.1.4.4 Kitchen Faucets. The maximum flow rate of kitchen faucets shall not exceed 1.8 gallons per minute at 60 psi. Kitchen faucets may temporarily increase the flow above the maximum rate, but not to exceed 2.2 gallons per minute at 60 psi, and must default to a maximum flow rate of 1.8 gallons per minute at 60 psi.

Note: Where complying faucets are unavailable, aerators or other means may be used to achieve reduction.

4.303.1.4.5 Pre-rinse spray valves.
When installed, shall meet the requirements in the *California Code of Regulations*, Title 20 (Appliance Efficiency Regulations), Sections 1605.1 (h)(4) Table H-2, Section 1605.3 (h)(4)(A), and Section 1607 (d)(7) and shall be equipped with an integral automatic shutoff.

FOR REFERENCE ONLY: The following table and code section have been reprinted from the *California Code of Regulations*, Title 20 (Appliance Efficiency Regulations),Section 1605.1 (h)(4) and Section 1605.3 (h)(4)(A).

TABLE H-2

STANDARDS FOR COMMERCIAL PRE-RINSE SPRAY VALUES MANUFACTURED ON OR AFTER JANUARY 28, 2019

PRODUCT CLASS [spray force in ounce force (ozf)]	MAXIMUM FLOW RATE (gpm)
Product Class 1 (≤ 5.0 ozf)	1.00
Product Class 2 (> 5.0 ozf and ≤ 8.0 ozf)	1.20
Product Class 3 (> 8.0 ozf)	1.28

Title 20 Section 1605.3 (h)(4)(A): Commercial prerinse spray values manufactured on or after January 1, 2006, shall have a minimum spray force of not less than 4.0 ounces-force (ozf)[113 grams-force(gf)]

4.303.2 Submeters for multifamily buildings and dwelling units in mixed-used residential/commercial buildings.
Submeters shall be installed to measure water usage of individual rental dwelling units in accordance with the *California Plumbing Code*.

4.303.3 Standards for plumbing fixtures and fittings. Plumbing fixtures and fittings shall be installed in accordance with the *California Plumbing Code*, and shall meet the applicable standards referenced in Table 1701.1 of the *California Plumbing Code*.

NOTE:
THIS TABLE COMPILES THE DATA IN SECTION 4.303.1, AND IS INCLUDED AS A CONVENIENCE FOR THE USER.

TABLE - MAXIMUM FIXTURE WATER USE

FIXTURE TYPE	FLOW RATE
SHOWER HEADS (RESIDENTIAL)	1.8 GMP @ 80 PSI
LAVATORY FAUCETS (RESIDENTIAL)	MAX. 1.2 GPM @ 60 PSI MIN. 0.8 GPM @ 20 PSI
LAVATORY FAUCETS IN COMMON & PUBLIC USE AREAS	0.5 GPM @ 60 PSI
KITCHEN FAUCETS	1.8 GPM @ 60 PSI
METERING FAUCETS	0.2 GAL/CYCLE
WATER CLOSET	1.28 GAL/FLUSH
URINALS	0.125 GAL/FLUSH

4.304 OUTDOOR WATER USE
4.304.1 OUTDOOR POTABLE WATER USE IN LANDSCAPE AREAS. Residential developments shall comply with a local water efficient landscape ordinance or the current California Department of Water Resources' Model Water Efficient Landscape Ordinance (MWELO), whichever is more stringent.

NOTES:

1. The Model Water Efficient Landscape Ordinance (MWELO) is located in the *California Code Regulations,* Title 23, Chapter 2.7, Division 2. MWELO and supporting documents, including water budget calculator, are available at: https://www.water.ca.gov/

DIVISION 4.4 MATERIAL CONSERVATION AND RESOURCE EFFICIENCY

4.406 ENHANCED DURABILITY AND REDUCED MAINTENANCE
4.406.1 RODENT PROOFING. Annular spaces around pipes, electric cables, conduits or other openings in sole/bottom plates at exterior walls shall be protected against the passage of rodents by closing such openings with cement mortar, concrete masonry or a similar method acceptable to the enforcing agency.

4.408 CONSTRUCTION WASTE REDUCTION, DISPOSAL AND RECYCLING
4.408.1 CONSTRUCTION WASTE MANAGEMENT. Recycle and/or salvage for reuse a minimum of 65 percent of the non-hazardous construction and demolition waste in accordance with either Section 4.408.2, 4.408.3 or 4.408.4, or meet a more stringent local construction and demolition waste management ordinance.

Exceptions:

1. Excavated soil and land-clearing debris.
2. Alternate waste reduction methods developed by working with local agencies if diversion or recycle facilities capable of compliance with this item do not exist or are not located reasonably close to the jobsite.
3. The enforcing agency may make exceptions to the requirements of this section when isolated jobsites are located in areas beyond the haul boundaries of the diversion facility.

4.408.2 CONSTRUCTION WASTE MANAGEMENT PLAN. Submit a construction waste management plan in conformance with Items 1 through 5. The construction waste management plan shall be updated as necessary and shall be available during construction for examination by the enforcing agency.

1. Identify the construction and demolition waste materials to be diverted from disposal by recycling, reuse on the project or salvage for future use or sale.
2. Specify if construction and demolition waste materials will be sorted on-site (source separated) or bulk mixed (single stream).
3. Identify diversion facilities where the construction and demolition waste material collected will be taken.
4. Identify construction methods employed to reduce the amount of construction and demolition waste generated.
5. Specify that the amount of construction and demolition waste materials diverted shall be calculated by weight or volume, but not by both.

4.408.3 WASTE MANAGEMENT COMPANY. Utilize a waste management company, approved by the enforcing agency, which can provide verifiable documentation that the percentage of construction and demolition waste material diverted from the landfill complies with Section 4.408.1.

Note: The owner or contractor may make the determination if the construction and demolition waste materials will be diverted by a waste management company.

4.408.4 WASTE STREAM REDUCTION ALTERNATIVE [LR]. Projects that generate a total combined weight of construction and demolition waste disposed of in landfills, which do not exceed 3.4 lbs./sq.ft. of the building area shall meet the minimum 65% construction waste reduction requirement in Section 4.408.1

4.408.4.1 WASTE STREAM REDUCTION ALTERNATIVE. Projects that generate a total combined weight of construction and demolition waste disposed of in landfills, which do not exceed 2 pounds per square foot of the building area, shall meet the minimum 65% construction waste reduction requirement in Section 4.408.1

4.408.5 DOCUMENTATION. Documentation shall be provided to the enforcing agency which demonstrates compliance with Section 4.408.2, items 1 through 5, Section 4.408.3 or Section 4.408.4.

Notes:

1. Sample forms found in "A Guide to the California Green Building Standards Code (Residential)" located at www.hcd.ca.gov/CALGreen.html may be used to assist in documenting compliance with this section.
2. Mixed construction and demolition debris (C & D) processors can be located at the California Department of Resources Recycling and Recovery (CalRecycle).

4.410 BUILDING MAINTENANCE AND OPERATION
4.410.1 OPERATION AND MAINTENANCE MANUAL. At the time of final inspection, a manual, compact disc, web-based reference or other media acceptable to the enforcing agency which includes all of the following shall be placed in the building:

1. Directions to the owner or occupant that the manual shall remain with the building throughout the life cycle of the structure.
2. Operation and maintenance instructions for the following:
   a. Equipment and appliances, including water-saving devices and systems, HVAC systems, photovoltaic systems, electric vehicle chargers, water-heating systems and other major appliances and equipment.
   b. Roof and yard drainage, including gutters and downspouts.
   c. Space conditioning systems, including condensers and air filters.
   d. Landscape irrigation systems.
   e. Water reuse systems.
3. Information from local utility, water and waste recovery providers on methods to further reduce resource consumption, including recycle programs and locations.
4. Public transportation and/or carpool options available in the area.
5. Educational material on the positive impacts of an interior relative humidity between 30-60 percent and what methods an occupant may use to maintain the relative humidity level in that range.
6. Information about water-conserving landscape and irrigation design and controllers which conserve water.
7. Instructions for maintaining gutters and downspouts and the importance of diverting water at least 5 feet away from the foundation.
8. Information on required routine maintenance measures, including, but not limited to, caulking, painting, grading around the building, etc.
9. Information about state solar energy and incentive programs available.
10. A copy of all special inspections verifications required by the enforcing agency or this code.
11. Information from the Department of Forestry and Fire Protection on maintenance of defensible space around residential structures.
12. Information and/or drawings identifying the location of grab bar reinforcements.

4.410.2 RECYCLING BY OCCUPANTS. Where 5 or more multifamily dwelling units are constructed on a building site, provide readily accessible area(s) that serves all buildings on the site and are identified for the depositing, storage and collection of non-hazardous materials for recycling, including (at a minimum) paper, corrugated cardboard, glass, plastics, organic waster, and metals, or meet a lawfully enacted local recycling ordinance, if more restrictive.

Exception: Rural jurisdictions that meet and apply for the exemption in Public Resources Code Section 42649.82 (a)(2)(A) et seq. are note required to comply with the organic waste portion of this section.

DIVISION 4.5 ENVIRONMENTAL QUALITY

SECTION 4.501 GENERAL
4.501.1 Scope
The provisions of this chapter shall outline means of reducing the quality of air contaminants that are odorous, irritating and/or harmful to the comfort and well being of a building's installers, occupants and neighbors.

SECTION 4.502 DEFINITIONS
5.102.1 DEFINITIONS
The following terms are defined in Chapter 2 *(and are included here for reference)*

AGRIFIBER PRODUCTS. Agrifiber products include wheatboard, strawboard, panel substrates and door cores, not including furniture, fixtures and equipment (FF&E) not considered base building elements.

COMPOSITE WOOD PRODUCTS. Composite wood products include hardwood plywood, particleboard and medium density fiberboard. "Composite wood products" does not include hardboard, structural plywood, structural panels, structural composite lumber, oriented strand board, glued laminated timber, prefabricated wood I-joists or finger-jointed lumber, all as specified in California Code of regulations (CCR), title 17, Section 93120.1.

DIRECT-VENT APPLIANCE. A fuel-burning appliance with a sealed combustion system that draws all air for combustion from the outside atmosphere and discharges all flue gases to the outside atmosphere.

TOWNE DAVIS ONLY

DISCLAIMER: *THIS DOCUMENT IS PROVIDED AND INTENDED TO BE USED AS A MEANS TO INDICATE AREAS OF COMPLIANCE WITH THE CALIFORNIA GREEN BUILDING STANDARDS (CALGREEN) CODE. DUE TO THE VARIABLES BETWEEN BUILDING DEPARTMENT JURISDICTIONS, THIS CHECKLIST IS TO BE USED ON AN INDIVIDUAL PROJECT BASIS AND MAY BE MODIFIED BY THE END USER TO MEET THOSE INDIVIDUAL NEEDS. THE END USER ASSUMES ALL RESPONSIBILITY ASSOCIATED WITH THE USE OF THIS DOCUMENT, INCLUDING VERIFICATION WITH THE FULL CODE.*

REVISIONS	DATE

LICENSED ARCHITECT
WILLIAM A. WOOD
C 13874
Jan. 31, 2025
REN. DATE
STATE OF CALIFORNIA

DANVILLE ACCESSORY DWELLING UNITS - STUDIO

DANVILLE CA 94526

WILLIAM WOOD ARCHITECTS
301 HARTZ AVENUE, SUITE 203
DANVILLE, CALIFORNIA 94526
(925) 820-8233

THIS IS AN ORIGINAL, UNPUBLISHED WORK, AND MAY NOT BE DUPLICATED, PUBLISHED, OR OTHERWISE USED WITHOUT WRITTEN CONSENT OF WILLIAM WOOD ARCHITECTS.

COPYRIGHT © WILLIAM WOOD ARCHITECTS, 2023

Apr 26, 2023 - 4:04pm GN2-GNB CAL GREEN.dwg

DRAWN	JJ
CHECKED	WW
DATE	03-30-23
SCALE	AS SHOWN
JOB NO.	20.921R
SHEET	GN2
OF	SHEETS

AIA California

2022 CALIFORNIA GREEN BUILDING STANDARDS CODE
RESIDENTIAL MANDATORY MEASURES, SHEET 2 (January 2023)

Y = YES
N/A = NOT APPLICABLE
RESPON. PARTY = RESPONSIBLE PARTY (ie: ARCHITECT, ENGINEER, OWNER, CONTRACTOR, INSPECTOR ETC.)

Y | N/A | RESPON. PARTY

MAXIMUM INCREMENTAL REACTIVITY (MIR). The maximum change in weight of ozone formed by adding a compound to the "Base Reactive Organic Gas (ROG) Mixture" per weight of compound added, expressed to hundredths of a gram (g O^3/g ROC).
Note: MIR values for individual compounds and hydrocarbon solvents are specified in CCR, Title 17, Sections 94700 and 94701.

MOISTURE CONTENT. The weight of the water in wood expressed in percentage of the weight of the oven-dry wood.

PRODUCT-WEIGHTED MIR (PWMIR). The sum of all weighted-MIR for all ingredients in a product subject to this article. The PWMIR is the total product reactivity expressed to hundredths of a gram of ozone formed per gram of product (excluding container and packaging).
Note: PWMIR is calculated according to equations found in CCR, Title 17, Section 94521 (a).

REACTIVE ORGANIC COMPOUND (ROC). Any compound that has the potential, once emitted, to contribute to ozone formation in the troposphere.

VOC. A volatile organic compound (VOC) broadly defined as a chemical compound based on carbon chains or rings with vapor pressures greater than 0.1 millimeters of mercury at room temperature. These compounds typically contain hydrogen and may contain oxygen, nitrogen and other elements. See CCR Title 17, Section 94508(a).

4.503 FIREPLACES
☐ ☐ **4.503.1 GENERAL**. Any installed gas fireplace shall be a direct-vent sealed-combustion type. Any installed woodstove or pellet stove shall comply with U.S. EPA New Source Performance Standards (NSPS) emission limits as applicable, and shall have a permanent label indicating they are certified to meet the emission limits. Woodstoves, pellet stoves and fireplaces shall also comply with applicable local ordinances.

4.504 POLLUTANT CONTROL
☐ ☐ **4.504.1 COVERING OF DUCT OPENINGS & PROTECTION OF MECHANICAL EQUIPMENT DURING CONSTRUCTION.** At the time of rough installation, during storage on the construction site and until final startup of the heating, cooling and ventilating equipment, all duct and other related air distribution component openings shall be covered with tape, plastic, sheet metal or other methods acceptable to the enforcing agency to reduce the amount of water, dust or debris which may enter the system.

☐ ☐ **4.504.2 FINISH MATERIAL POLLUTANT CONTROL.** Finish materials shall comply with this section.

☐ ☐ **4.504.2.1 Adhesives, Sealants and Caulks.** Adhesives, sealant and caulks used on the project shall meet the requirements of the following standards unless more stringent local or regional air pollution or air quality management district rules apply:

1. Adhesives, adhesive bonding primers, adhesive primers, sealants, sealant primers and caulks shall comply with local or regional air pollution control or air quality management district rules where applicable or SCAQMD Rule 1168 VOC limits, as shown in Table 4.504.1 or 4.504.2, as applicable. Such products also shall comply with the Rule 1168 prohibition on the use of certain toxic compounds (chloroform, ethylene dichloride, methylene chloride, perchloroethylene and tricloroethylene), except for aerosol products, as specified in Subsection 2 below.

2. Aerosol adhesives, and smaller unit sizes of adhesives, and sealant or caulking compounds (in units of product, less packaging, which do not weigh more than 1 pound and do not consist of more than 16 fluid ounces) shall comply with statewide VOC standards and other requirements, including prohibitions on use of certain toxic compounds, of *California Code of Regulations*, Title 17, commencing with section 94507.

☐ ☐ **4.504.2.2 Paints and Coatings.** Architectural paints and coatings shall comply with VOC limits in Table 1 of the ARB Architectural Suggested Control Measure, as shown in Table 4.504.3, unless more stringent local limits apply. The VOC content limit for coatings that do not meet the definitions for the specialty coatings categories listed in Table 4.504.3 shall be determined by classifying the coating as a Flat, Nonflat or Nonflat-High Gloss coating, based on its gloss, as defined in subsections 4.21, 4.36, and 4.37 of the 2007 California Air Resources Board, Suggested Control Measure, and the corresponding Flat, Nonflat or Nonflat-High Gloss VOC limit in Table 4.504.3 shall apply.

☐ ☐ **4.504.2.3 Aerosol Paints and Coatings.** Aerosol paints and coatings shall meet the Product-weighted MIR Limits for ROC in Section 94522(a)(2) and other requirements, including prohibitions on use of certain toxic compounds and ozone depleting substances, in Sections 94522(e)(1) and (f)(1) of *California Code of Regulations*, Title 17, commencing with Section 94520; and in areas under the jurisdiction of the Bay Area Air Quality Management District additionally comply with the percent VOC by weight of product limits of Regulation 8, Rule 49.

☐ ☐ **4.504.2.4 Verification.** Verification of compliance with this section shall be provided at the request of the enforcing agency. Documentation may include, but is not limited to, the following:

1. Manufacturer's product specification.
2. Field verification of on-site product containers.

TABLE 4.504.1 - ADHESIVE VOC LIMIT[1,2]
(Less Water and Less Exempt Compounds in Grams per Liter)

ARCHITECTURAL APPLICATIONS	VOC LIMIT
INDOOR CARPET ADHESIVES	50
CARPET PAD ADHESIVES	50
OUTDOOR CARPET ADHESIVES	150
WOOD FLOORING ADHESIVES	100
RUBBER FLOOR ADHESIVES	60
SUBFLOOR ADHESIVES	50
CERAMIC TILE ADHESIVES	65
VCT & ASPHALT TILE ADHESIVES	50
DRYWALL & PANEL ADHESIVES	50
COVE BASE ADHESIVES	50
MULTIPURPOSE CONSTRUCTION ADHESIVE	70
STRUCTURAL GLAZING ADHESIVES	100
SINGLE-PLY ROOF MEMBRANE ADHESIVES	250
OTHER ADHESIVES NOT LISTED	50
SPECIALTY APPLICATIONS	
PVC WELDING	510
CPVC WELDING	490
ABS WELDING	325
PLASTIC CEMENT WELDING	250
ADHESIVE PRIMER FOR PLASTIC	550
CONTACT ADHESIVE	80
SPECIAL PURPOSE CONTACT ADHESIVE	250
STRUCTURAL WOOD MEMBER ADHESIVE	140
TOP & TRIM ADHESIVE	250
SUBSTRATE SPECIFIC APPLICATIONS	
METAL TO METAL	30
PLASTIC FOAMS	50
POROUS MATERIAL (EXCEPT WOOD)	50
WOOD	30
FIBERGLASS	80

1. IF AN ADHESIVE IS USED TO BOND DISSIMILAR SUBSTRATES TOGETHER, THE ADHESIVE WITH THE HIGHEST VOC CONTENT SHALL BE ALLOWED.

2. FOR ADDITIONAL INFORMATION REGARDING METHODS TO MEASURE THE VOC CONTENT SPECIFIED IN THIS TABLE, SEE SOUTH COAST AIR QUALITY MANAGEMENT DISTRICT RULE 1168.

TABLE 4.504.2 - SEALANT VOC LIMIT
(Less Water and Less Exempt Compounds in Grams per Liter)

SEALANTS	VOC LIMIT
ARCHITECTURAL	250
MARINE DECK	760
NONMEMBRANE ROOF	300
ROADWAY	250
SINGLE-PLY ROOF MEMBRANE	450
OTHER	420
SEALANT PRIMERS	
ARCHITECTURAL	
NON-POROUS	250
POROUS	775
MODIFIED BITUMINOUS	500
MARINE DECK	760
OTHER	750

TABLE 4.504.3 - VOC CONTENT LIMITS FOR ARCHITECTURAL COATINGS[2,3]
GRAMS OF VOC PER LITER OF COATING, LESS WATER & LESS EXEMPT COMPOUNDS

COATING CATEGORY	VOC LIMIT
FLAT COATINGS	50
NON-FLAT COATINGS	100
NONFLAT-HIGH GLOSS COATINGS	150
SPECIALTY COATINGS	
ALUMINUM ROOF COATINGS	400
BASEMENT SPECIALTY COATINGS	400
BITUMINOUS ROOF COATINGS	50
BITUMINOUS ROOF PRIMERS	350
BOND BREAKERS	350
CONCRETE CURING COMPOUNDS	350
CONCRETE/MASONRY SEALERS	100
DRIVEWAY SEALERS	50
DRY FOG COATINGS	150
FAUX FINISHING COATINGS	350
FIRE RESISTIVE COATINGS	350
FLOOR COATINGS	100
FORM-RELEASE COMPOUNDS	250
GRAPHIC ARTS COATINGS (SIGN PAINTS)	500
HIGH TEMPERATURE COATINGS	420
INDUSTRIAL MAINTENANCE COATINGS	250
LOW SOLIDS COATINGS[1]	120
MAGNESITE CEMENT COATINGS	450
MASTIC TEXTURE COATINGS	100
METALLIC PIGMENTED COATINGS	500
MULTICOLOR COATINGS	250
PRETREATMENT WASH PRIMERS	420
PRIMERS, SEALERS, & UNDERCOATERS	100
REACTIVE PENETRATING SEALERS	350
RECYCLED COATINGS	250
ROOF COATINGS	50
RUST PREVENTATIVE COATINGS	250
SHELLACS	
CLEAR	730
OPAQUE	550
SPECIALTY PRIMERS, SEALERS & UNDERCOATERS	100
STAINS	250
STONE CONSOLIDANTS	450
SWIMMING POOL COATINGS	340
TRAFFIC MARKING COATINGS	100
TUB & TILE REFINISH COATINGS	420
WATERPROOFING MEMBRANES	250
WOOD COATINGS	275
WOOD PRESERVATIVES	350
ZINC-RICH PRIMERS	340

1. GRAMS OF VOC PER LITER OF COATING, INCLUDING WATER & EXEMPT COMPOUNDS

2. THE SPECIFIED LIMITS REMAIN IN EFFECT UNLESS REVISED LIMITS ARE LISTED IN SUBSEQUENT COLUMNS IN THE TABLE.

3. VALUES IN THIS TABLE ARE DERIVED FROM THOSE SPECIFIED BY THE CALIFORNIA AIR RESOURCES BOARD, ARCHITECTURAL COATINGS SUGGESTED CONTROL MEASURE, FEB. 1, 2008. MORE INFORMATION IS AVAILABLE FROM THE AIR RESOURCES BOARD.

TABLE 4.504.5 - FORMALDEHYDE LIMITS[1]
MAXIMUM FORMALDEHYDE EMISSIONS IN PARTS PER MILLION

PRODUCT	CURRENT LIMIT
HARDWOOD PLYWOOD VENEER CORE	0.05
HARDWOOD PLYWOOD COMPOSITE CORE	0.05
PARTICLE BOARD	0.09
MEDIUM DENSITY FIBERBOARD	0.11
THIN MEDIUM DENSITY FIBERBOARD[2]	0.13

1. VALUES IN THIS TABLE ARE DERIVED FROM THOSE SPECIFIED BY THE CALIF. AIR RESOURCES BOARD, AIR TOXICS CONTROL MEASURE FOR COMPOSITE WOOD AS TESTED IN ACCORDANCE WITH ASTM E 1333. FOR ADDITIONAL INFORMATION, SEE CALIF. CODE OF REGULATIONS, TITLE 17, SECTIONS 93120 THROUGH 93120.12.

2. THIN MEDIUM DENSITY FIBERBOARD HAS A MAXIMUM THICKNESS OF 5/16" (8 MM).

DIVISION 4.5 ENVIRONMENTAL QUALITY (continued)
☐ ☐ **4.504.3 CARPET SYSTEMS.** All carpet installed in the building interior shall meet the requirements of the California Department of Public Health, "Standard Method for the Testing and Evaluation of Volatile Organic Chemical Emissions from Indoor Sources Using Environmental Chambers," Version 1.2, January 2017 (Emission testing method for California Specification 01350)

See California Department of Public Health's website for certification programs and testing labs.

https://www.cdph.ca.gov/Programs/CCDPHP/DEODC/EHLB/IAQ/Pages/VOC.aspx.

☐ ☐ **4.504.3.1 Carpet cushion.** All carpet cushion installed in the building interior shall meet the requirements of the California Department of Public Health, "Standard Method for the Testing and Evaluation of Volatile Organic Chemical Emissions from Indoor Sources Using Environmental Chambers," Version 1.2, January 2017 (Emission testing method for California Specification 01350)

See California Department of Public Health's website for certification programs and testing labs.

https://www.cdph.ca.gov/Programs/CCDPHP/DEODC/EHLB/IAQ/Pages/VOC.aspx.

☐ ☐ **4.504.3.2 Carpet adhesive.** All carpet adhesive shall meet the requirements of Table 4.504.1.

☐ ☐ **4.504.4 RESILIENT FLOORING SYSTEMS.** Where resilient flooring is installed , at least 80% of floor area receiving resilient flooring shall meet the requirements of the California Department of Public Health, "Standard Method for the Testing and Evaluation of Volatile Organic Chemical Emissions from Indoor Sources Using Environmental Chambers," Version 1.2, January 2017 (Emission testing method for California Specification 01350)

See California Department of Public Health's website for certification programs and testing labs.

hhttps://www.cdph.ca.gov/Programs/CCDPHP/DEODC/EHLB/IAQ/Pages/VOC.aspx.

☐ ☐ **4.504.5 COMPOSITE WOOD PRODUCTS.** Hardwood plywood, particleboard and medium density fiberboard composite wood products used on the interior or exterior of the buildings shall meet the requirements for formaldehyde as specified in ARB's Air Toxics Control Measure for Composite Wood (17 CCR 93120 et seq.), by or before the dates specified in those sections, as shown in Table 4.504.5

☐ ☐ **4.504.5.1 Documentation.** Verification of compliance with this section shall be provided as requested by the enforcing agency. Documentation shall include at least one of the following:

1. Product certifications and specifications.
2. Chain of custody certifications.
3. Product labeled and invoiced as meeting the Composite Wood Products regulation (see CCR, Title 17, Section 93120, et seq.).
4. Exterior grade products marked as meeting the PS-1 or PS-2 standards of the Engineered Wood Association, the Australian AS/NZS 2269, European 636 3S standards, and Canadian CSA 0121, CSA 0151, CSA 0153 and CSA 0325 standards.
5. Other methods acceptable to the enforcing agency.

4.505 INTERIOR MOISTURE CONTROL
4.505.1 General. Buildings shall meet or exceed the provisions of the *California Building Standards Code.*

☐ ☐ **4.505.2 CONCRETE SLAB FOUNDATIONS.** Concrete slab foundations required to have a vapor retarder by California Building Code, Chapter 19, or concrete slab-on-ground floors required to have a vapor retarder by the California Residential Code, Chapter 5, shall also comply with this section.

☐ ☐ **4.505.2.1 Capillary break.** A capillary break shall be installed in compliance with at least one of the following:

1. A 4-inch (101.6 mm) thick base of 1/2 inch (12.7mm) or larger clean aggregate shall be provided with a vapor barrier in direct contact with concrete and a concrete mix design, which will address bleeding, shrinkage, and curling, shall be used. For additional information, see American Concrete Institute, ACI 302.2R-06.
2. Other equivalent methods approved by the enforcing agency.
3. A slab design specified by a licensed design professional.

☐ ☐ **4.505.3 MOISTURE CONTENT OF BUILDING MATERIALS.** Building materials with visible signs of water damage shall not be installed. Wall and floor framing shall not be enclosed when the framing members exceed 19 percent moisture content. Moisture content shall be verified in compliance with the following:

1. Moisture content shall be determined with either a probe-type or contact-type moisture meter.Equivalent moisture verification methods may be approved by the enforcing agency and shall satisfy requirements found in Section 101.8 of this code.
2. Moisture readings shall be taken at a point 2 feet (610 mm) to 4 feet (1219 mm) from the grade stamped end of each piece verified.
3. At least three random moisture readings shall be performed on wall and floor framing with documentation acceptable to the enforcing agency provided at the time of approval to enclose the wall and floor framing.

Insulation products which are visibly wet or have a high moisture content shall be replaced or allowed to dry prior to enclosure in wall or floor cavities. Wet-applied insulation products shall follow the manufacturers' drying recommendations prior to enclosure.

4.506 INDOOR AIR QUALITY AND EXHAUST
☐ ☐ **4.506.1 Bathroom exhaust fans.** Each bathroom shall be mechanically ventilated and shall comply with the following:

1. Fans shall be ENERGY STAR compliant and be ducted to terminate outside the building.
2. Unless functioning as a component of a whole house ventilation system, fans must be controlled by a humidity control.
   a. Humidity controls shall be capable of adjustment between a relative humidity range less than or equal to 50% to a maximum of 80%. A humidity control may utilize manual or automatic means of adjustment.
   b. A humidity control may be a separate component to the exhaust fan and is not required to be integral (i.e., built-in)

Notes:

1. For the purposes of this section, a bathroom is a room which contains a bathtub, shower or tub/shower combination.
2. Lighting integral to bathroom exhaust fans shall comply with the *California Energy Code.*

4.507 ENVIRONMENTAL COMFORT
☐ ☐ **4.507.2 HEATING AND AIR-CONDITIONING SYSTEM DESIGN.** Heating and air conditioning systems shall be sized, designed and have their equipment selected using the following methods:

1. The heat loss and heat gain is established according to ANSI/ACCA 2 Manual J - 2011 (Residential Load Calculation), ASHRAE handbooks or other equivalent design software or methods.
2. Duct systems are sized according to ANSI/ACCA 1 Manual D - 2014 (Residential Duct Systems), ASHRAE handbooks or other equivalent design software or methods.
3. Select heating and cooling equipment according to ANSI/ACCA 3 Manual S - 2014 (Residential Equipment Selection), or other equivalent design software or methods.

Exception: Use of alternate design temperatures necessary to ensure the system functions are acceptable.

CHAPTER 7
INSTALLER & SPECIAL INSPECTOR QUALIFICATIONS

702 QUALIFICATIONS
☐ ☐ **702.1 INSTALLER TRAINING.** HVAC system installers shall be trained and certified in the proper installation of HVAC systems including ducts and equipment by a nationally or regionally recognized training or certification program. Uncertified persons may perform HVAC installations when under the direct supervision and responsibility of a person trained and certified to install HVAC systems or contractor licensed to install HVAC systems. Examples of acceptable HVAC training and certification programs include but are not limited to the following:

1. State certified apprenticeship programs.
2. Public utility training programs.
3. Training programs sponsored by trade, labor or statewide energy consulting or verification organizations.
4. Programs sponsored by manufacturing organizations.
5. Other programs acceptable to the enforcing agency.

☐ ☐ **702.2 SPECIAL INSPECTION [HCD].** When required by the enforcing agency, the owner or the responsible entity acting as the owner's agent shall employ one or more special inspectors to provide inspection or other duties necessary to substantiate compliance with this code. Special inspectors shall demonstrate competence to the satisfaction of the enforcing agency for the particular type of inspection or task to be performed. In addition to other certifications or qualifications acceptable to the enforcing agency, the following certifications or education may be considered by the enforcing agency when evaluating the qualifications of a special inspector:

1. Certification by a national or regional green building program or standard publisher.
2. Certification by a statewide energy consulting or verification organization, such as HERS raters, building performance contractors, and home energy auditors.
3. Successful completion of a third party apprentice training program in the appropriate trade.
4. Other programs acceptable to the enforcing agency.

Notes:
1. Special inspectors shall be independent entities with no financial interest in the materials or the project they are inspecting for compliance with this code.
2. HERS raters are special inspectors certified by the California Energy Commission (CEC) to rate homes in California according to the Home Energy Rating System (HERS).

[BSC] When required by the enforcing agency, the owner or the responsible entity acting as the owner's agent shall employ one or more special inspectors to provide inspection or other duties necessary to substantiate compliance with this code. Special inspectors shall demonstrate competence to the satisfaction of the enforcing agency for the particular type of inspection or task to be performed. In addition, the special inspector shall have a certification from a recognized state, national or international association, as determined by the local agency. The area of certification shall be closely related to the primary job function, as determined by the local agency.

Note: Special inspectors shall be independent entities with no financial interest in the materials or the project they are inspecting for compliance with this code.

703 VERIFICATIONS
☐ ☐ **703.1 DOCUMENTATION.** Documentation used to show compliance with this code shall include but is not limited to, construction documents, plans, specifications, builder or installer certification, inspection reports, or other methods acceptable to the enforcing agency which demonstrate substantial conformance. When specific documentation or special inspection is necessary to verify compliance, that method of compliance will be specified in the appropriate section or identified applicable checklist.

DISCLAIMER: THIS DOCUMENT IS PROVIDED AND INTENDED TO BE USED AS A MEANS TO INDICATE AREAS OF COMPLIANCE WITH THE CALIFORNIA GREEN BUILDING STANDARDS (CALGREEN) CODE. DUE TO THE VARIABLES BETWEEN BUILDING DEPARTMENT JURISDICTIONS, THIS CHECKLIST IS TO BE USED ON AN INDIVIDUAL PROJECT BASIS AND MAY BE MODIFIED BY THE END USER TO MEET THOSE INDIVIDUAL NEEDS. THE END USER ASSUMES ALL RESPONSIBILITY ASSOCIATED WITH THE USE OF THIS DOCUMENT, INCLUDING VERIFICATION WITH THE FULL CODE.

TOWN OF DANVILLE USE ONLY

REVISIONS	DATE

LICENSED ARCHITECT
WILLIAM A. WOOD
C 13874
Jan. 31, 2025
REN. DATE
STATE OF CALIFORNIA

DANVILLE ACCESSORY DWELLING UNITS - STUDIO
DANVILLE CA 94526

WILLIAM WOOD ARCHITECTS
301 HARTZ AVENUE, SUITE 203
DANVILLE, CALIFORNIA 94526
(925) 820-8233

THIS IS AN ORIGINAL, UNPUBLISHED WORK, AND MAY NOT BE DUPLICATED, PUBLISHED, OR OTHERWISE USED WITHOUT WRITTEN CONSENT OF WILLIAM WOOD ARCHITECTS.

COPYRIGHT © WILLIAM WOOD ARCHITECTS, 2023

Apr 26, 2023 - 4:03pm GN2-GN3 CAL GREEN.dwg

DRAWN	KU
CHECKED	WW
DATE	03-30-23
SCALE	AS SHOWN
JOB NO.	20.921R
SHEET	GN3
OF	SHEETS

PLAN SET ID: S-ME-R-P

GENERAL INFORMATION

01	Project Name	Danville ADU Mediterranean Studio			
02	Run Title	Title 24 Analysis			
03	Project Location	Varies			
04	City	Danville, CA	05	Standards Version	2022
06	Zip code	94526	07	Software Version	CBECC-Res 2022.2.1
08	Climate Zone	12	09	Front Orientation (deg/ Cardinal)	All orientations
10	Building Type	Single family	11	Number of Dwelling Units	1
12	Project Scope	Newly Constructed	13	Number of Bedrooms	1
14	Addition Cond. Floor Area (ft^2)	0	15	Number of Stories	1
16	Existing Cond. Floor Area (ft^2)	n/a	17	Fenestration Average U-factor	0.31
18	Total Cond. Floor Area (ft^2)	640	19	Glazing Percentage (%)	17.30%
20	ADU Bedroom Count	n/a			

COMPLIANCE RESULTS

01	Building Complies with Computer Performance
02	This building incorporates features that require field testing and/or verification by a certified HERS rater under the supervision of a CEC-approved HERS provider.
03	This building incorporates one or more Special Features shown below

ENERGY DESIGN RATINGS

	Energy Design Ratings			Compliance Margins		
	Source Energy (EDR1)	Efficiency[1] EDR (EDR2efficiency)	Total[2] EDR (EDR2total)	Source Energy (EDR1)	Efficiency[1] EDR (EDR2efficiency)	Total[2] EDR (EDR2total)
Standard Design	41.1	44.5	58.9			
Proposed Design						
North Facing	33.8	40.5	56.6	7.3	4	2.3
East Facing	34	41.5	57.2	7.1	3	1.7
South Facing	33.5	39.7	56	7.6	4.8	2.9
West Facing	34.1	43.3	58.2	7	1.2	0.7
RESULT[3]: PASS						

[1]Efficiency EDR includes improvements like a better building envelope and more efficient equipment
[2]Total EDR includes efficiency and demand response measures such as photovoltaic (PV) system and batteries
[3]Building complies when source energy, efficiency and total compliance margins are greater than or equal to zero and unmet load hour limits are not exceeded

- Standard Design PV Capacity: 0.00 kWdc
- Proposed PV Capacity Scaling: North (0.00 kWdc) East (0.00 kWdc) South (0.00 kWdc) West (0.00 kWdc)

ENERGY USE SUMMARY

Energy Use	Standard Design Source Energy (EDR1) (kBtu/ft^2 -yr)	Standard Design TDV Energy (EDR2) (kTDV/ft^2 -yr)	Proposed Design Source Energy (EDR1) (kBtu/ft^2 -yr)	Proposed Design TDV Energy (EDR2) (kTDV/ft^2 -yr)	Compliance Margin (EDR1)	Compliance Margin (EDR2)
Space Heating	7.13	31.36	3.2	24.6	3.93	6.76
Space Cooling	1.06	31.57	0.99	33.14	0.07	-1.57
IAQ Ventilation	0.87	9.28	1.38	14.79	-0.51	-5.51
Water Heating	3.59	37.82	2.64	27.67	0.95	10.15
Self Utilization/Flexibility Credit				0		0
North Facing Efficiency Compliance Total	**12.65**	**110.03**	**8.21**	**100.2**	**4.44**	**9.83**
Space Heating	7.13	31.36	3.18	24.18	3.95	7.18
Space Cooling	1.06	31.57	1.15	36.04	-0.09	-4.47
IAQ Ventilation	0.87	9.28	1.38	14.79	-0.51	-5.51
Water Heating	3.59	37.82	2.64	27.67	0.95	10.15
Self Utilization/Flexibility Credit				0		0
East Facing Efficiency Compliance Total	**12.65**	**110.03**	**8.35**	**102.68**	**4.3**	**7.35**

ENERGY USE SUMMARY

Energy Use	Standard Design Source Energy (EDR1) (kBtu/ft^2 -yr)	Standard Design TDV Energy (EDR2) (kTDV/ft^2 -yr)	Proposed Design Source Energy (EDR1) (kBtu/ft^2 -yr)	Proposed Design TDV Energy (EDR2) (kTDV/ft^2 -yr)	Compliance Margin (EDR1)	Compliance Margin (EDR2)
Space Heating	7.13	31.36	3.04	23	4.09	8.36
Space Cooling	1.06	31.57	0.99	32.6	0.07	-1.03
IAQ Ventilation	0.87	9.28	1.38	14.79	-0.51	-5.51
Water Heating	3.59	37.82	2.64	27.67	0.95	10.15
Self Utilization/Flexibility Credit				0		0
South Facing Efficiency Compliance Total	**12.65**	**110.03**	**8.05**	**98.06**	**4.6**	**11.97**
Space Heating	7.13	31.36	3.12	23.97	4.01	7.39
Space Cooling	1.06	31.57	1.28	40.58	-0.22	-9.01
IAQ Ventilation	0.87	9.28	1.38	14.79	-0.51	-5.51
Water Heating	3.59	37.82	2.64	27.67	0.95	10.15
Self Utilization/Flexibility Credit				0		0
West Facing Efficiency Compliance Total	**12.65**	**110.03**	**8.42**	**107.01**	**4.23**	**3.02**

ENERGY USE INTENSITY

	Standard Design (kBtu/ft^2 - yr)	Proposed Design (kBtu/ft^2 - yr)	Compliance Margin (kBtu/ft^2 - yr)	Margin Percentage
North Facing				
Gross EUI[1]	32.25	26.5	5.75	17.83
Net EUI[2]	32.25	26.5	5.75	17.83
East Facing				
Gross EUI[1]	32.25	26.75	5.5	17.05
Net EUI[2]	32.25	26.75	5.5	17.05
South Facing				
Gross EUI[1]	32.25	26.3	5.95	18.45
Net EUI[2]	32.25	26.3	5.95	18.45
West Facing				
Gross EUI[1]	32.25	26.86	5.39	16.71
Net EUI[2]	32.25	26.86	5.39	16.71

Notes
1. Gross EUI is Energy Use Total (not including PV) / Total Building Area.
2. Net EUI is Energy Use Total (including PV) / Total Building Area.

REQUIRED PV SYSTEMS

01	02	03	04	05	06	07	08	09	10	11	12
DC System Size (kWdc)	Exception	Module Type	Array Type	Power Electronics	CFI	Azimuth (deg)	Tilt Input	Array Angle (deg)	Tilt: (x in 12)	Inverter Eff. (%)	Annual Solar Access (%)
0		Standard (14-17%)	Fixed	none	true	n/a	n/a	n/a	n/a	n/a	

REQUIRED SPECIAL FEATURES

The following are features that must be installed as condition for meeting the modeled energy performance for this computer analysis.

- PV exception 2: No PV required when minimum PV size (Section 150.1(c)14) < 1.8 kWdc (0 kW)
- Indoor air quality, balanced fan
- IAQ Ventilation System Heat Recovery: minimum 67 SRE and 73 ASRE
- IAQ Ventilation System: supply outside air inlet, filter, and H/ERV cores accessible per RACM Reference Manual
- IAQ Ventilation System: fault indicator display
- Insulation below roof deck
- Window overhangs and/or fins
- Northwest Energy Efficiency Alliance (NEEA) rated heat pump water heater; specific brand/model, or equivalent, must be installed

HERS FEATURE SUMMARY

The following is a summary of the features that must be field-verified by a certified HERS Rater as a condition for meeting the modeled energy performance for this computer analysis. Additional detail is provided in the buildng tables below. Registered CF2Rs and CF3Rs are required to be completed in the HERS Registry

- Indoor air quality ventilation
- Kitchen range hood
- Minimum Airflow
- Verified SEER/SEER2
- Verified Refrigerant Charge
- Fan Efficacy Watts/CFM
- Verified HSPF
- Verified heat pump rated heating capacity
- Duct leakage testing

BUILDING - FEATURES INFORMATION

01	02	03	04	05	06	07
Project Name	Conditioned Floor Area (ft^2)	Number of Dwelling Units	Number of Bedrooms	Number of Zones	Number of Ventilation Cooling Systems	Number of Water Heating Systems
Danville ADU Mediterranean Studio	640	1	1	1	0	1

ZONE INFORMATION

01	02	03	04	05	06	07
Zone Name	Zone Type	HVAC System Name	Zone Floor Area (ft^2)	Avg. Ceiling Height	Water Heating System 1	Status
Accessory Unit	Conditioned	HVAC System 1	640	10	DHW System 1	New

OPAQUE SURFACES

01	02	03	04	05	06	07	08
Name	Zone	Construction	Azimuth	Orientation	Gross Area (ft^2)	Window and Door Area (ft2)	Tilt (deg)
Front Wall	Accessory Unit	Exterior 2x6 Wall R-21	0	Front	320	74	90
Left Wall	Accessory Unit	Exterior 2x6 Wall R-21	90	Left	200	9	90
Back Wall	Accessory Unit	Exterior 2x6 Wall R-21	180	Back	320	19	90
Right Wall	Accessory Unit	Exterior 2x6 Wall R-21	270	Right	200	9	90
Ceiling Below Attic	Accessory Unit	R-38 Attic Ceiling	n/a	n/a	640	n/a	n/a

ATTIC

01	02	03	04	05	06	07	08
Name	Construction	Type	Roof Rise (x in 12)	Roof Reflectance	Roof Emittance	Radiant Barrier	Cool Roof
Attic	Attic Roof	Ventilated	4	0.1	0.85	No	No

FENESTRATION / GLAZING

01	02	03	04	05	06	07	08	09	10	11	12	13	14
Name	Type	Surface	Orientation	Azimuth	Width (ft)	Height (ft)	Mult.	Area (ft^2)	U-factor	U-factor Source	SHGC	SHGC Source	Exterior Shading
Front Door	Window	Front Wall	Front	0	3	8	1	24	0.34	NFRC	0.2	NFRC	Bug Screen
FamilyRm 5050	Window	Front Wall	Front	0	5	5	1	25	0.3	NFRC	0.23	NFRC	Bug Screen
Bedroom 5050	Window	Front Wall	Front	0	5	5	1	25	0.3	NFRC	0.23	NFRC	Bug Screen
Kitchen 3030	Window	Left Wall	Left	90	3	3	1	9	0.3	NFRC	0.23	NFRC	Bug Screen
Bathroom 2020	Window	Back Wall	Back	180	2	2	1	4	0.3	NFRC	0.23	NFRC	Bug Screen
DiningRm 5030	Window	Back Wall	Back	180	5	3	1	15	0.3	NFRC	0.23	NFRC	Bug Screen
Bedroom 3030	Window	Right Wall	Right	270	3	3	1	9	0.3	NFRC	0.23	NFRC	Bug Screen

OVERHANGS AND FINS

01	02	03	04	05	06	07	08	09	10	11	12	13	14
Window	Overhang					Left Fin				Right Fin			
	Depth	Dist Up	Left Extent	Right Extent	Flap Ht.	Depth	Top Up	Dist L	Bot Up	Depth	Top Up	Dist R	Bot Up
Front Door	5	0	2	2	0	0	0	0	0	0	0	0	0
FamilyRm 5050	4	0	2	2	0	0	0	0	0	0	0	0	0
Bedroom 5050	1	0	2	2	0	0	0	0	0	0	0	0	0
Kitchen 3030	1	0	2	2	0	0	0	0	0	0	0	0	0
Bathroom 2020	1	0	2	2	0	0	0	0	0	0	0	0	0
DiningRm 5030	1	0	2	2	0	0	0	0	0	0	0	0	0

OVERHANGS AND FINS

01	02	03	04	05	06	07	08	09	10	11	12	13	14
Window	Overhang					Left Fin				Right Fin			
	Depth	Dist Up	Left Extent	Right Extent	Flap Ht.	Depth	Top Up	Dist L	Bot Up	Depth	Top Up	Dist R	Bot Up
Bedroom 3030	1	0	2	2	0	0	0	0	0	0	0	0	0

SLAB FLOORS

01	02	03	04	05	06	07	08
Name	Zone	Area (ft^2)	Perimeter (ft)	Edge Insul. R-value and Depth	Edge Insul. R-value and Depth	Carpeted Fraction	Heated
Slab On Grade	Accessory Unit	640	104	none	0	80%	No

OPAQUE SURFACE CONSTRUCTIONS

01	02	03	04	05	06	07	08
Construction Name	Surface Type	Construction Type	Framing	Total Cavity R-value	Interior / Exterior Continuous R-value	U-factor	Assembly Layers
Exterior 2x6 Wall R-21	Exterior Walls	Wood Framed Wall	2x6 @ 16 in. O. C.	R-21	None / None	0.065	Inside Finish: Gypsum Board Cavity / Frame: R-21 / 2x6 Sheathing / Insulation: Wood Siding/sheathing/decking Exterior Finish: 3 Coat Stucco
Attic Roof	Attic Roofs	Wood Framed Ceiling	2x4 Top Chord of Roof Truss @ 24 in. O. C.	R-13	None / None	0.072	Roofing: 10 PSF (RoofTileAirGap) Tile Gap: present Roof Deck: Wood Siding/sheathing/decking Cavity / Frame: R-13.0 / 2x4 Top Chrd Around Roof Joists: R-0.0 insul.
R-38 Attic Ceiling	Ceilings (below attic)	Wood Framed Ceiling	2x4 Bottom Chord of Truss @ 24 in. O. C.	R-38	None / None	0.025	Over Ceiling Joists: R-28.9 insul. Cavity / Frame: R-9.1 / 2x4 Btm Chrd Inside Finish: Gypsum Board

BUILDING ENVELOPE - HERS VERIFICATION

01	02	03	04	05
Quality Insulation Installation (QII)	High R-value Spray Foam Insulation	Building Envelope Air Leakage	CFM50	CFM50
Not Required	Not Required	N/A	n/a	n/a

WATER HEATING SYSTEMS

01	02	03	04	05	06	07	08	09
Name	System Type	Distribution Type	Water Heater Name	Number of Units	Solar Heating System	Compact Distribution	HERS Verification	Water Heater Name (#)
DHW System 1	Domestic Hot Water (DHW)	Standard	Heat Pump WH	1	n/a	None	n/a	Heat Pump WH (1)

WATER HEATERS - NEEA HEAT PUMP

01	02	03	04	05	06	07	08
Name	# of Units	Tank Vol. (gal)	NEEA Heat Pump Brand	NEEA Heat Pump Model	Tank Location	Duct Inlet Air Source	Duct Outlet Air Source
Heat Pump WH	1	40	Rheem	RheemPROPH40T2R H37515	Outside	Outside	Outside

WATER HEATING - HERS VERIFICATION

01	02	03	04	05	06	07
Name	Pipe Insulation	Parallel Piping	Compact Distribution	Compact Distribution Type	Recirculation Control	Shower Drain Water Heat Recovery
DHW System 1 - 1/1	Not Required	Not Required	Not Required	None	Not Required	Not Required

SPACE CONDITIONING SYSTEMS

01	02	03	04	05	06	07	08	09
Name	System Type	Heating Unit Name	Heating Equipment Count	Cooling Unit Name	Cooling Equipment Count	Fan Name	Distribution Name	Required Thermostat Type
HVAC System 1	Heat pump heating cooling	PEAD-A24AA7	1	PEAD-A24AA7	1	HVAC Fan System 1	Distribution System 1	Setback

HVAC - HEAT PUMPS

01	02	03	04	05	06	07	08	09	10	11	12	13
Name	System Type	Number of Units	Heating				Cooling			Zonally Controlled	Compressor Type	HERS Verification
			Efficiency Type	HSPF / HSPF2 / COP	Cap 47	Cap 17	Efficiency Type	SEER / SEER2	EER / EER / CEER			
PEAD-A24AA7	Central split HP	1	HSPF	10.8	26000	14800	EERSEER	19.6	11.7	Not Zonal	Single Speed	PEAD-A24AA7-hers-htpump

HVAC HEAT PUMPS - HERS VERIFICATION

01	02	03	04	05	06	07	08	09
Name	Verified Airflow	Airflow Target	Verified EER/EER2	Verified SEER/SEER2	Verified Refrigerant Charge	Verified HSPF/HSPF2	Verified Heating Cap 47	Verified Heating Cap 17
PEAD-A24AA7-hers-htpump	Required	350	Not Required	Required	Yes	Yes	Yes	Yes

HVAC - DISTRIBUTION SYSTEMS

01	02	03	04	05	06	07	08	09	10	11	12
Name	Type	Design Type	Duct Ins. R-value		Duct Location		Surface Area		Bypass Duct	Duct Leakage	HERS Verification
			Supply	Return	Supply	Return	Supply	Return			
Distribution System 1	Unconditioned attic	Non-Verified	R-6	R-6	Attic	Attic	n/a	n/a	No Bypass Duct	Sealed and Tested	Distribution System 1-hers-dist

HVAC DISTRIBUTION - HERS VERIFICATION

01	02	03	04	05	06	07	08	09
Name	Duct Leakage Verification	Duct Leakage Target (%)	Verified Duct Location	Verified Duct Design	Buried Ducts	Deeply Buried Ducts	Low-leakage Air Handler	Low Leakage Ducts Entirely in Conditioned Space
Distribution System 1-hers-dist	Yes	5.0	Not Required	Not Required	Not Required	Credit not taken	Not Required	No

HVAC - FAN SYSTEMS

01	02	03	04
Name	Type	Fan Power (Watts/CFM)	Name
HVAC Fan System 1	HVAC Fan	0.45	HVAC Fan System 1-hers-fan

HVAC FAN SYSTEMS - HERS VERIFICATION

01	02	03
Name	Verified Fan Watt Draw	Required Fan Efficacy (Watts/CFM)
HVAC Fan System 1-hers-fan	Required	0.45

INDOOR AIR QUALITY (IAQ) FANS

01	02	03	04	05	06	07	08	09
Dwelling Unit	Airflow (CFM)	Fan Efficacy (W/CFM)	IAQ Fan Type	Includes Heat/Energy Recovery?	IAQ Recovery Effectiveness - SRE	Includes Fault Indicator Display?	HERS Verification	Status
SFam IAQVentRpt 1-1	49	0.816326	Balanced	Yes	73	No	Yes	

DOCUMENTATION AUTHOR'S DECLARATION STATEMENT

1. I certify that this Certificate of Compliance documentation is accurate and complete.

Documentation Author Name: Jason E Bennett	Documentation Author Signature: Jason Bennett
Company: DP Advanced Engineering	Signature Date: 2023-03-30 19:18:04
Address: 3381 Walnut Blvd. Ste. 220	CEA/ HERS Certification Identification (If applicable): R19-21-30042
City/State/Zip: Brentwood, CA 94513	Phone: 925-516-3502

CABEC California Association of Building Energy Consultants CERTIFIED ENERGY ANALYST

RESPONSIBLE PERSON'S DECLARATION STATEMENT

I certify the following under penalty of perjury, under the laws of the State of California:
1. I am eligible under Division 3 of the Business and Professions Code to accept responsibility for the building design identified on this Certificate of Compliance.
2. I certify that the energy features and performance specifications identified on this Certificate of Compliance conform to the requirements of Title 24, Part 1 and Part 6 of the California Code of Regulations.
3. The building design features or system design features identified on this Certificate of Compliance are consistent with the information provided on other applicable compliance documents, worksheets, calculations, plans and specifications submitted to the enforcement agency for approval with this building permit application.

Responsible Designer Name: William Wood	Responsible Designer Signature: William Wood
Company: William Wood Architects	Date Signed: 2023-03-31 08:35:29
Address: 301 Hartz Ave #203	License: C13874
City/State/Zip: Danville, CA 94526	Phone: 925-820-8233

Digitally signed by CalCERTS. This digital signature is provided in order to secure the content of this registered document, and in no way implies Registration Provider responsibility for the accuracy of the information.

Easy to Verify at CalCERTS.com

CalCERTS, Inc. HERS PROVIDER
TOWN OF DANVILLE USE ONLY

ADVANCED ENGINEERING
3381 Walnut Blvd. Ste. 220
Brentwood, CA 94513
Office: 925.516.3502
Fax: 925.262.4662

NOTE: THE LOADS SHOWN ARE ONLY ONE OF THE CRITERIA AFFECTING THE SELECTION OF HVAC EQUIPMENT. OTHER RELEVANT DESIGN FACTORS SUCH AS AIRFLOW, OUTDOOR DESIGN TEMPERATURES, COIL SIZING, AVAILABILITY OF EQUIPMENT, OVERSIZING MARGIN, ETC. MUST ALSO BE CONSIDERED. IT IS THE HVAC DESIGNER'S RESPONSIBILITY TO CONSIDER ALL FACTORS WHEN SELECTING THE HVAC EQUIPMENT. MECHANICAL CONTRACTOR MUST WARRANT THE INSTALLED SYSTEM TO MEET ALL ENERGY STAR REQUIREMENTS IF APPLICABLE. THE MINIMUM SIZE OF THE RESIDENTIAL HEATING SYSTEMS IS REGULATED BY THE CALIFORNIA BUILDING CODE (CBC), SECTION 310.11. THE CBC REQUIRES THAT THE HEATING SYSTEM BE CAPABLE OF MAINTAINING A TEMPERATURE OF 70° AT A DISTANCE THREE FEET ABOVE THE FLOOR THROUGHOUT THE CONDITIONED SPACE OF THE BUILDING. DP ADVANCED ENGINEERING, INC. DOES NOT WARRANT OR ASSUME RESPONSIBILITY FOR PERFORMANCE OR INSTALLATION OF ANY EQUIPMENT LABELED OR ALLUDED TO ON ANY CALCULATION PRODUCED BY DP ADVANCED ENGINEERING, INC. BUILDER AND ALL SUB-CONTRACTORS WORKING ON THE PROJECT INVOLVING TITLE-24 UNDERSTAND AND ACCEPT ALL ASPECTS OF THE TITLE-24 SUBMITTED TO BUILDING DEPARTMENT PERTAINING TO THEIR WORK. ALL SUB-CONTRACTORS ARE RESPONSIBLE TO CONTACT THE BUILDER AND DP ADVANCED ENGINEERING, INC. BEFORE BEGINNING WORK IF THERE IS ANY ERROR IN ANY CALCULATION THAT WOULD PREVENT THE SUB-CONTRACTOR FROM WARRANTING THE PERFORMANCE OF HIS PRODUCT WHICH INCLUDED ANY ENERGY STAR PROCEDURES.

TOWN OF DANVILLE
ACCESSORY DWELLING UNIT
DANVILLE, CALIFORNIA

1
2
3
4
5
6

PLEASE NOTE THE REVISION NUMBER AND DATE ARE FOR ENERGY SHEETS ONLY.

Sheet Description:

ENERGY CALCULATIONS
MEDITERRANEAN
STUDIO
PERFORMANCE CERTIFICATE
RESIDENTIAL CF-1R

Initial Issue Date: March 31, 2023
Energy Analyst: J. Bennett Ext. 26
Project Manager: J. Peek Ext. 23
Job No. W021420
Sheet No. EC

PLAN SET ID: S-ME-R-P

2022 Single-Family Residential Mandatory Requirements Summary

NOTE: Single-family residential buildings subject to the Energy Codes must comply with all applicable mandatory measures, regardless of the compliance approach used. Review the respective section for more information.
(04/2022)

Building Envelope:

§ 110.6(a)1:	**Air Leakage.** Manufactured fenestration, exterior doors, and exterior pet doors must limit air leakage to 0.3 CFM per square foot or less when tested per NFRC-400, ASTM E283, or AAMA/WDMA/CSA 101/I.S.2/A440-2011. *
§ 110.6(a)5:	**Labeling.** Fenestration products and exterior doors must have a label meeting the requirements of § 10-111(a).
§ 110.6(b):	**Field fabricated exterior doors and fenestration** products must use U-factors and solar heat gain coefficient (SHGC) values from Tables 110.6-A, 110.6-B, or JA4.5 for exterior doors. They must be caulked and/or weather-stripped. *
§ 110.7:	**Air Leakage.** All joints, penetrations, and other openings in the building envelope that are potential sources of air leakage must be caulked, gasketed, or weather stripped.
§ 110.8(a):	**Insulation Certification by Manufacturers.** Insulation must be certified by the Department of Consumer Affairs, Bureau of Household Goods and Services (BHGS).
§ 110.8(g):	**Insulation Requirements for Heated Slab Floors.** Heated slab floors must be insulated per the requirements of § 110.8(g).
§ 110.8(i):	**Roofing Products Solar Reflectance and Thermal Emittance.** The thermal emittance and aged solar reflectance values of the roofing material must meet the requirements of § 110.8(i) and be labeled per §10-113 when the installation of a cool roof is specified on the CF1R.
§ 110.8(j):	**Radiant Barrier.** When required, radiant barriers must have an emittance of 0.05 or less and be certified to the Department of Consumer Affairs.
§ 150.0(a):	**Roof Deck, Ceiling and Rafter Roof Insulation.** Roof decks in newly constructed attics in climate zones 4 and 8-16 area-weighted average U-factor not exceeding U-0.184. Ceiling and rafter roofs minimum R-22 insulation in wood-frame ceiling; or area-weighted average U-factor must not exceed 0.043. Rafter roof alterations minimum R-19 or area-weighted average U-factor of 0.054 or less. Attic access doors must have permanently attached insulation using adhesive or mechanical fasteners. The attic access must be gasketed to prevent air leakage. Insulation must be installed in direct contact with a roof or ceiling which is sealed to limit infiltration and exfiltration as specified in § 110.7, including but not limited to placing insulation either above or below the roof deck or on top of a drywall ceiling. *
§ 150.0(b):	**Loose-fill Insulation.** Loose fill insulation must meet the manufacturer's required density for the labeled R-value.
§ 150.0(c):	**Wall Insulation.** Minimum R-13 insulation in 2x4 inch wood framing wall or have a U-factor of 0.102 or less, or R-20 in 2x6 inch wood framing or have a U-factor of 0.071 or less. Opaque non-framed assemblies must have an overall assembly U-factor not exceeding 0.102. Masonry walls must meet Tables 150.1-A or B. *
§ 150.0(d):	**Raised-floor Insulation.** Minimum R-19 insulation in raised wood framed floor or 0.037 maximum U-factor. *
§ 150.0(f):	**Slab Edge Insulation.** Slab edge insulation must meet all of the following: have a water absorption rate, for the insulation material alone without facings, no greater than 0.3 percent; have a water vapor permeance no greater than 2.0 perm per inch; be protected from physical damage and UV light deterioration; and, when installed as part of a heated slab floor, meet the requirements of § 110.8(g).
§ 150.0(g)1:	**Vapor Retarder.** In climate zones 1 through 16, the earth floor of unvented crawl space must be covered with a Class I or Class II vapor retarder. This requirement also applies to controlled ventilation crawl space for buildings complying with the exception to §150.0(d).
§ 150.0(g)2:	**Vapor Retarder.** In climate zones 14 and 16, a Class I or Class II vapor retarder must be installed on the conditioned space side of all insulation in all exterior walls, vented attics, and unvented attics with air-permeable insulation.
§ 150.0(q):	**Fenestration Products.** Fenestration, including skylights, separating conditioned space from unconditioned space or outdoors must have a maximum U-factor of 0.45; or area-weighted average U-factor of all fenestration must not exceed 0.45. *

Fireplaces, Decorative Gas Appliances, and Gas Log:

§ 110.5(e)	**Pilot Light.** Continuously burning pilot lights are not allowed for indoor and outdoor fireplaces.
§ 150.0(e)1:	**Closable Doors.** Masonry or factory-built fireplaces must have a closable metal or glass door covering the entire opening of the firebox.
§ 150.0(e)2:	**Combustion Intake.** Masonry or factory-built fireplaces must have a combustion outside air intake, which is at least six square inches in area and is equipped with a readily accessible, operable, and tight-fitting damper or combustion-air control device. *
§ 150.0(e)3:	**Flue Damper.** Masonry or factory-built fireplaces must have a flue damper with a readily accessible control. *

Space Conditioning, Water Heating, and Plumbing System:

§ 110.0-§ 110.3:	**Certification.** Heating, ventilation, and air conditioning (HVAC) equipment, water heaters, showerheads, faucets, and all other regulated appliances must be certified by the manufacturer to the California Energy Commission. *
§ 110.2(a):	**HVAC Efficiency.** Equipment must meet the applicable efficiency requirements in Table 110.2-A through Table 110.2-N. *
§ 110.2(b):	**Controls for Heat Pumps with Supplementary Electric Resistance Heaters.** Heat pumps with supplementary electric resistance heaters must have controls that prevent supplementary heater operation when the heating load can be met by the heat pump alone; and in which the cut-on temperature for compression heating is higher than the cut-on temperature for supplementary heating, and the cut-off temperature for compression heating is higher than the cut-off temperature for supplementary heating. *
§ 110.2(c):	**Thermostats.** All heating or cooling systems not controlled by a central energy management control system (EMCS) must have a setback thermostat. *
§ 110.3(c)3:	**Insulation.** Unfired service water heater storage tanks and solar water-heating backup tanks must have adequate insulation, or tank surface heat loss rating.
§ 110.3(c)6:	**Isolation Valves.** Instantaneous water heaters with an input rating greater than 6.8 kBtu per hour (2 kW) must have isolation valves with hose bibbs or other fittings on both cold and hot water lines to allow for flushing the water heater when the valves are closed.

5/6/22

2022 Single-Family Residential Mandatory Requirements Summary

§ 110.5:	**Pilot Lights.** Continuously burning pilot lights are prohibited for natural gas: fan-type central furnaces; household cooking appliances (except appliances without an electrical supply voltage connection with pilot lights that consume less than 150 Btu per hour); and pool and spa heaters. *
§ 150.0(h)1:	**Building Cooling and Heating Loads.** Heating and/or cooling loads are calculated in accordance with the ASHRAE Handbook, Equipment Volume, Applications Volume, and Fundamentals Volume; the SMACNA Residential Comfort System Installation Standards Manual; or the ACCA Manual J using design conditions specified in § 150.0(h)2.
§ 150.0(h)3A:	**Clearances.** Air conditioner and heat pump outdoor condensing units must have a clearance of at least five feet from the outlet of any dryer.
§ 150.0(h)3B:	**Liquid Line Drier.** Air conditioners and heat pump systems must be equipped with liquid line filter driers if required, as specified by the manufacturer's instructions.
§ 150.0(j)1:	**Water Piping, Solar Water-heating System Piping, and Space Conditioning System Line Insulation.** All domestic hot water piping must be insulated as specified in § 609.11 of the California Plumbing Code. *
§ 150.0(j)2:	**Insulation Protection.** Piping insulation must be protected from damage, including that due to sunlight, moisture, equipment` maintenance, and wind as required by §120.3(b). Insulation exposed to weather must be water retardant and protected from UV light (no adhesive tapes). Insulation covering chilled water piping and refrigerant suction piping located outside the conditioned space must include, or be protected by, a Class I or Class II vapor retarder. Pipe insulation buried below grade must be installed in a waterproof and non-crushable casing or sleeve.
§ 150.0(n)1:	**Gas or Propane Water Heating Systems.** Systems using gas or propane water heaters to serve individual dwelling units must designate a space at least 2.5' x 2.5' x 7' suitable for the future installation of a heat pump water heater, and meet electrical and plumbing requirements, based on the distance between this designated space and the water heater location; and a condensate drain no more than 2" higher than the base of the water heater
§ 150.0(n)3:	**Solar Water-heating Systems.** Solar water-heating systems and collectors must be certified and rated by the Solar Rating and Certification Corporation (SRCC), the International Association of Plumbing and Mechanical Officials, Research and Testing (IAPMO R&T), or by a listing agency that is approved by the executive director.

Ducts and Fans:

§ 110.8(d)3:	**Ducts.** Insulation installed on an existing space-conditioning duct must comply with § 604.0 of the California Mechanical Code (CMC). If a contractor installs the insulation, the contractor must certify to the customer, in writing, that the insulation meets this requirement.
§ 150.0(m)1:	**CMC Compliance.** All air-distribution system ducts and plenums must meet CMC §§ 601.0-605.0 and ANSI/SMACNA-006-2006 HVAC Duct Construction Standards Metal and Flexible 3rd Edition. Portions of supply-air and return-air ducts and plenums must be insulated to R-6.0 or higher; ducts located entirely in conditioned space as confirmed through field verification and diagnostic testing (RA3.1.4.3.8) do not require insulation. Connections of metal ducts and inner core of flexible ducts must be mechanically fastened. Openings must be sealed with mastic, tape, or other duct-closure system that meets the applicable UL requirements, or aerosol sealant that meets UL 723. The combination of mastic and either mesh or tape must be used to seal openings greater than ¼", if mastic or tape is used. Building cavities, air handler support platforms, and plenums designed or constructed with materials other than sealed sheet metal, duct board or flexible duct must not be used to convey conditioned air. Building cavities and support platforms may contain ducts; ducts installed in these spaces must not be compressed. *
§ 150.0(m)2:	**Factory-Fabricated Duct Systems.** Factory-fabricated duct systems must comply with applicable requirements for duct construction, connections, and closures; joints and seams of duct systems and their components must not be sealed with cloth back rubber adhesive duct tapes unless such tape is used in combination with mastic and draw bands.
§ 150.0(m)3:	**Field-Fabricated Duct Systems.** Field-fabricated duct systems must comply with applicable requirements for: pressure-sensitive tapes, mastics, sealants, and other requirements specified for duct construction.
§ 150.0(m)7:	**Backdraft Damper.** Fan systems that exchange air between the conditioned space and outdoors must have backdraft or automatic dampers.
§ 150.0(m)8:	**Gravity Ventilation Dampers.** Gravity ventilating systems serving conditioned space must have either automatic or readily accessible, manually operated dampers in all openings to the outside, except combustion inlet and outlet air openings and elevator shaft vents.
§ 150.0(m)9:	**Protection of Insulation.** Insulation must be protected from damage due tosunlight, moisture, equipment maintenance, and wind. Insulation exposed to weather must be suitable for outdoor service (e.g., protected by aluminum, sheet metal, painted canvas, or plastic cover). Cellular foam insulation must be protected as above or painted with a water retardant and solar radiation-resistant coating.
§ 150.0(m)10:	**Porous Inner Core Flex Duct.** Porous inner cores of flex ducts must have a non-porous layer or air barrier between the inner core and outer vapor barrier.
§ 150.0(m)11:	**Duct System Sealing and Leakage Test.** When space conditioning systems use forced air duct systems to supply conditioned air to an occupiable space, the ducts must be sealed and duct leakage tested, as confirmed through field verification and diagnostic testing, in accordance with Reference Residential Appendix RA3.1.
§ 150.0(m)12:	**Air Filtration.** Space conditioning systems with ducts exceeding 10 feet and the supply side of ventilation systems must have MERV 13 or equivalent filters. Filters for space conditioning systems must have a two inch depth or can be one inch if sized per Equation 150.0-A. Clean-filter pressure drop and labeling must meet the requirements in §150.0(m)12. Filters must be accessible for regular service. Filter racks or grilles must use gaskets, sealing, or other means to close gaps around the inserted filters to and prevents air from bypassing the filter. *

5/6/22

2022 Single-Family Residential Mandatory Requirements Summary

§ 150.0(m)13:	**Space Conditioning System Airflow Rate and Fan Efficacy.** Space conditioning systems that use ducts to supply cooling must have a hole for the placement of a static pressure probe, or a permanently installed static pressure probe in the supply plenum. Airflow must be ≥ 350 CFM per ton of nominal cooling capacity, and an air-handling unit fan efficacy ≤ 0.45 watts per CFM for gas furnace air handlers and ≤ 0.58 watts per CFM for all others. Small duct high velocity systems must provide an airflow ≥ 250 CFM per ton of nominal cooling capacity, and an air-handling unit fan efficacy ≤ 0.62 watts per CFM. Field verification testing is required in accordance with Reference Residential Appendix RA3.3. *

Ventilation and Indoor Air Quality:

§ 150.0(o)1:	**Requirements for Ventilation and Indoor Air Quality**. All dwelling units must meet the requirements of ASHRAE Standard 62.2, Ventilation and Acceptable Indoor Air Quality in Residential Buildings subject to the amendments specified in § 150.0(o)1. *
§ 150.0(o)1B:	**Central Fan Integrated (CFI) Ventilation Systems.** Continuous operation of CFI air handlers is not allowed to provide the whole-dwelling unit ventilation airflow required per §150.0(o)1C. A motorized damper(s) must be installed on the ventilation duct(s) that prevents all airflow through the space conditioning duct system when the damper(s) is closed andcontrolled per §150.0(o)1Biii&iv. CFI ventilation systems must have controls that track outdoor air ventilation run time, and either open or close the motorized damper(s) for compliance with §150.0(o)1C.
§ 150.0(o)1C:	**Whole-Dwelling Unit Mechanical Ventilation for Single-Family Detached and townhouses .** Single-family detached dwelling units, and attached dwelling units not sharing ceilings or floors with other dwelling units, occupiable spaces, public garages, or commercial spaces must have mechanical ventilation airflow specified in § 150.0(o)1Ci-iii.
§ 150.0(o)1G:	**Local Mechanical Exhaust.** Kitchens and bathrooms must have local mechanical exhaust; nonenclosed kitchens must have demand-controlled exhaust system meeting requirements of §150.0(o)1Giii,enclosed kitchens and bathrooms can use demand-controlled or continuous exhaust meeting §150.0(o)1Giii-iv. Airflow must be measured by the installer per §150.0(o)1Gv, and rated for sound per §150.0(o)1Gvi. *
§ 150.0(o)1H&I:	**Airflow Measurement and Sound Ratings of Whole-Dwelling Unit Ventilation Systems.** The airflow required per § 150.0(o)1C must be measured by using a flow hood, flow grid, or other airflow measuring device at the fan's inlet or outlet terminals/grilles per Reference Residential Appendix RA3.7. Whole-Dwelling unit ventilation systems must be rated for sound per ASHRAE 62.2 §7.2 at no less than the minimum airflow rate required by §150.0(o)1C.
§ 150.0(o)2:	**Field Verification and Diagnostic Testing.** Whole-Dwelling Unit ventilation airflow, vented range hood airflow and sound rating, and HRV and ERV fan efficacy must be verified in accordance with Reference Residential Appendix RA3.7. Vented range hoods must be verified per Reference Residential Appendix RA3.7.4.3 to confirm if it is rated by HVI or AHAM to comply with the airflow rates and sound requirements per §150.0(o)1G

Pool and Spa Systems and Equipment:

§ 110.4(a):	**Certification by Manufacturers.** Any pool or spa heating system or equipment must be certified to have all of the following: compliance with the Appliance Efficiency Regulations and listing in MAEDbS; an on-off switch mounted outside of the heater that allows shutting off the heater without adjusting the thermostat setting; a permanent weatherproof plate or card with operating instructions; and must not use electric resistance heating. *
§ 110.4(b)1:	**Piping.** Any pool or spa heating system or equipment must be installed with at least 36 inches of pipe between the filter and the heater, or dedicated suction and return lines, or built-in or built-up connections to allow for future solar heating.
§ 110.4(b)2:	**Covers.** Outdoor pools or spas that have a heat pump or gas heater must have a cover.
§ 110.4(b)3:	**Directional Inlets and Time Switches for Pools.** Pools must have directional inlets that adequately mix the pool water, and a time switch that will allow all pumps to be set or programmed to run only during off-peak electric demand periods.
§ 110.5:	**Pilot Light.** Natural gas pool and spa heaters must not have a continuously burning pilot light.
§ 150.0(p):	**Pool Systems and Equipment Installation.** Residential pool systems or equipment must meet the specified requirements for pump sizing, flow rate, piping, filters, and valves. *

Lighting:

§ 110.9:	**Lighting Controls and Components.** All lighting control devices and systems, ballasts, and luminaires must meet the applicable requirements of § 110.9. *
§ 150.0(k)1A:	**Luminaire Efficacy.** All installed luminaires must meet the requirements in Table 150.0-A, except lighting integral to exhaust fans, kitchen range hoods, bath vanity mirrors, and garage door openers; navigation lighting less than 5 watts; and lighting internal to drawers, cabinets, and linen closets with an efficacy of at least 45 lumens per watt.
§ 150.0(k)1B:	**Screw based luminaires.** Screw based luminaires must contain lamps that comply with Reference Joint Appendix JA8. *
§ 150.0(k)1C:	**Recessed Downlight Luminaires in Ceilings.** Luminaires recessed into ceilings must not contain screw based sockets, must be airtight, and must be sealed with a gasket or caulk. California Electrical Code § 410.116 must also be met.
§ 150.0(k)1D:	**Light Sources in Enclosed or Recessed Luminaires.** Lamps and other separable light sources that are not compliant with the JA8 elevated temperature requirements, including marking requirements, must not be installed in enclosed or recessed luminaires.
§ 150.0(k)1E:	**Blank Electrical Boxes.** The number of electrical boxes that are more than five feet above the finished floor and do not contain a luminaire or other device shall be no more than the number of bedrooms. These boxes must be served by a dimmer, vacancy sensor control, low voltage wiring, or fan speed control.
§ 150.0(k)1F:	**Lighting Integral to Exhaust Fans.** Lighting integral to exhaust fans (except when installed by the manufacturer in kitchen exhaust hoods) must meet the applicable requirements of § 150.0(k). *

5/6/22

2022 Single-Family Residential Mandatory Requirements Summary

§ 150.0(k)1G:	**Screw based luminaires.** Screw based luminaires must contain lamps that comply with Reference Joint Appendix JA8. *
§ 150.0(k)1H:	**Light Sources in Enclosed or Recessed Luminaires.** Lamps and other separable light sources that are not compliant with the JA8 elevated temperature requirements, including marking requirements, must not be installed in enclosed or recessed luminaires.
§ 150.0(k)1I:	**Light Sources in Drawers, Cabinets, and Linen Closets.** Light sources internal to drawers, cabinetry or linen closets are not required to comply with Table 150.0-A or be controlled by vacancy sensors provided that they are rated to consume no more than 5 watts of power, emit no more than 150 lumens, and are equipped with controls that automatically turn the lighting off when the drawer, cabinet or linen closet is closed.
§ 150.0(k)2A:	**Interior Switches and Controls.** All forward phase cut dimmers used with LED light sources must comply with NEMA SSL 7A.
§ 150.0(k)2B:	**Interior Switches and Controls.** Exhaust fans must be controlled separately from lighting systems. *
§ 150.0(k)2A:	**Accessible Controls.** Lighting must have readily accessible wall-mounted controls that allow the lighting to be manually turned on and off. *
§ 150.0(k)2B:	**Multiple Controls.** Controls must not bypass a dimmer, occupant sensor, or vacancy sensor function if the dimmer or sensor is installed to comply with § 150.0(k).
§ 150.0(k)2C:	**Mandatory Requirements.** Lighting controls must comply with the applicable requirements of § 110.9.
§ 150.0(k)2D:	**Energy Management Control Systems.** An energy management control system (EMCS) may be used to comply with dimming, occupancy, and control requirements if it provides the functionality of the specified control per § 110.9 and the physical controls specified in § 150.0(k)2A.
§ 150.0(k)2E:	**Automatic Shutoff Controls.** In bathrooms, garages, laundry rooms, utility rooms and walk-in closets, at least one installed luminaire must be controlled by an occupancy or vacancy sensor providing automatic-off functionality. Lighting inside drawers and cabinets with opaque fronts or doors must have controls that turn the light off when the drawer or door is closed.
§ 150.0(k)2F:	**Dimmers.** Lighting in habitable spaces (e.g., living rooms, dining rooms, kitchens, and bedrooms) must have readily accessible wall-mounted dimming controls that allow the lighting to be manually adjusted up and down. Forward phase cut dimmers controlling LED light sources in these spaces must comply with NEMA SSL 7A.
§ 150.0(k)2K:	**Independent controls.** Integrated lighting of exhaust fans shall be controlled independently from the fans. Lighting under cabinets or shelves, lighting in display cabinets, and switched outlets must be controlled separately from ceiling-installed lighting.
§ 150.0(k)3A:	**Residential Outdoor Lighting.** For single-family residential buildings, outdoor lighting permanently mounted to a residential building, or to other buildings on the same lot, must have a manual on/off switch and either a photocell and motion sensor or automatic time switch control) or an astronomical time clock. An energy management control system that provides the specified control functionality and meets all applicable requirements may be used to meet these requirements.
§ 150.0(k)4:	**Internally illuminated address signs.** Internally illuminated address signs must either comply with § 140.8 or consume no more than 5 watts of power.
§ 150.0(k)5:	**Residential Garages for Eight or More Vehicles.** Lighting for residential parking garages for eight or more vehicles must comply with the applicable requirements for nonresidential garages in §§ 110.9, 130.0, 130.1, 130.4, 140.6, and 141.0.

Solar Readiness:

§ 110.10(a)1:	**Single-family Residences.** Single-family residences located in subdivisions with 10 or more single-family residences and where the application for a tentative subdivision map for the residences has been deemed complete and approved by the enforcement agency, which do not have a photovoltaic system installed, must comply with the requirements of § 110.10(b)-(e).
§110.10(b)1A:	**Minimum Solar Zone Area.** The solar zone must have a minimum total area as described below. The solar zone must comply with access, pathway, smoke ventilation, and spacing requirements as specified in Title 24, Part 9 or other parts of Title 24 or in any requirements adopted by a local jurisdiction. The solar zone total area must be comprised of areas that have no dimension less than 5 feet and are no less than 80 square feet each for buildings with roof areas less than or equal to 10,000 square feet or no less than 160 square feet each for buildings with roof areas greater than 10,000 square feet. For single-family residences, the solar zone must be located on the roof or overhang of the building and have a total area no less than 250 square feet. *
§ 110.10(b)2:	**Azimuth.** All sections of the solar zone located on steep-sloped roofs must have an azimuth between 90-300° of true north.
§ 110.10(b)3A:	**Shading.** The solar zone must not contain any obstructions, including but not limited to: vents, chimneys, architectural features, and roof mounted equipment. *
§ 110.10(b)3B:	**Shading.** Any obstruction located on the roof or any other part of the building that projects above a solar zone must be located at least twice the horizontal distance of the height difference between the highest point of the obstruction and the horizontal projection of the nearest point of the solar zone, measured in the vertical plane. *
§ 110.10(b)4:	**Structural Design Loads on Construction Documents.** For areas of the roof designated as a solar zone, the structural design loads for roof dead load and roof live load must be clearly indicated on the construction documents.
§ 110.10(c):	**Interconnection Pathways.** The construction documents must indicate: a location reserved for inverters and metering equipment and a pathway reserved for routing of conduit from the solar zone to the point of interconnection with the electrical service; and for single-family residences and central water-heating systems, a pathway reserved for routing plumbing from the solar zone to the water-heating system.
§ 110.10(d):	**Documentation.** A copy of the construction documents or a comparable document indicating the information from § 110.10(b)-(c) must be provided to the occupant.
§ 110.10(e)1:	**Main Electrical Service Panel.** The main electrical service panel must have a minimum busbar rating of 200 amps.
§ 110.10(e)2:	**Main Electrical Service Panel.** The main electrical service panel must have a reserved space to allow for the installation of a double pole circuit breaker for a future solar electric installation. The reserved space must be permanently marked as "For Future Solar Electric."

Electric and Energy Storage Ready:

5/6/22

2022 Single-Family Residential Mandatory Requirements Summary

§ 150.0(s)	**Energy Storage System (ESS) Ready.** All single-family residences must meet all of the following: Either ESS-ready interconnection equipment with backed up capacity of 60 amps or more and four or more ESS supplied branch circuits, *or* a dedicated raceway from the main service to a subpanel that supplies the branch circuits in § 150.0(s); at least four branch circuits must be identified and have their source collocated at a single panelboard suitable to be supplied by the ESS, with one circuit supplying the refrigerator, one lighting circuit near the primary exit, and one circuit supplying a sleeping room receptacle outlet; main panelboard must have a minimum busbar rating of 225 amps; sufficient space must be reserved to allow future installation of a system isolation equipment/transfer switch within 3' of the main panelboard, with raceways installed between the panelboard and the switch location to allow the connection of backup power source.
§ 150.0(t)	**Heat Pump Space Heater Ready.** Systems using gas or propane furnaces to serve individual dwelling units must include: A dedicated unobstructed 240V branch circuit wiring installed within 3' of the furnace with circuit conductors rated at least 30 amps with the blank cover identified as "240V ready;" and a reserved main electrical service panel space to allow for the installation of a double pole circuit breaker permanently marked as "For Future 240V use."
§ 150.0(u)	**Electric Cooktop Ready.** Systems using gas or propane cooktop to serve individual dwelling units must include: A dedicated unobstructed 240V branch circuit wiring installed within 3' of the cooktop with circuit conductors rated at least 50 amps with the blank cover identified as "240V ready;" and a reserved main electrical service panel space to allow for the installation of a double pole circuit breaker permanently marked as "For Future 240V use."
§ 150.0(v)	**Electric Clothes Dryer Ready.** Clothes dryer locations with gas or propane plumbing to serve individual dwelling units must include: A dedicated unobstructed 240V branch circuit wiring installed within 3' of the dryer location with circuit conductors rated at least 30 amps with the blank cover identified as "240V ready;" and a reserved main electrical service panel space to allow for the installation of a double pole circuit breaker permanently marked as "For Future 240V use."

*Exceptions may apply.

5/6/22

ADVANCED ENGINEERING
STRUCTURAL ENGINEERING SOLUTIONS

TITLE 24 SUMMARY OF FEATURES

PROJECT: TOWN OF DANVILLE ADU **DATE: 3-31-2023**
JOB NO: W021420 **ANALYST: J. BENNETT**

ENVELOPE INSULATION

EXTERIOR WALLS:
R-21 IN 2x6
FOUNDATION:
SLAB, NOT INSULATED
ROOF OVER LIVING SPACE:
R-38 BETWEEN CEILING JOISTS
R-13 BETWEEN RAFTERS

WINDOW PERFORMANCE

MAXIMUM WINDOW PERFORMANCE VALUES (U-FACTOR / SHGC)
WINDOWS: .30/.23
FRENCH DOORS: .32/.16

DOMESTIC HOT WATER

RHEEM 40-GALLON HEAT PUMP WATER HEATER OR EQUIV.

SOLAR (STUDIO)

(NOT REQUIRED; CALCULATED SIZE IS <1.8 KW)

SOLAR (1 BEDROOM)

2.0 KW MINIMUM
ACCEPTABLE ORIENTATION:
(DEGREES EAST OF TRUE NORTH)

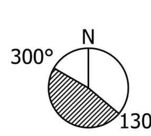

HERS VERIFICATIONS

- INDOOR AIR QUALITY VENTILATION
- KITCHEN RANGE HOOD
- MINIMUM AIRFLOW [350 CFM/TON]
- VERIFIED SEER [19.6]
- VERIFIED REFRIGERANT CHARGE
- FAN EFFICACY WATTS/CFM [0.45]
- VERIFIED HSPF [10.8]
- VERIFIED HEAT PUMP RATED HEATING CAPACITY
- DUCT LEAKAGE TESTING [5%]

SPACE HEATING & COOLING

HEAT PUMP (10.2 HSPF, 19.6 SEER, 11.7 EER)
MITSUBISHI PEAD-A24AA7 + PUZ-A24NHA7
AHRI # 201754661

DUCTS

SUPPLY AIR DUCTS IN ATTIC
DUCTS IN UNCONDITIONED SPACE TO HAVE R-6 INSULATION

INDOOR AIR QUALITY

BROAN ERV100S ENERGY RECOVERY VENTILATOR OR EQUIV.

3381 Walnut Blvd. Ste.220 Brentwood, CA 94513 PH: 925.516.3502 FX: 925.262.4662 W: WWW.ADVANCEDENGINEERINGINC.COM

ADVANCED ENGINEERING
3381 Walnut Blvd. Ste. 220
Brentwood, CA 94513
Office: 925.516.3502
Fax: 925.262.4662

NOTE: THE LOADS SHOWN ARE ONLY ONE OF THE CRITERIA AFFECTING THE SELECTION OF HVAC EQUIPMENT. OTHER RELEVANT DESIGN FACTORS SUCH AS AIRFLOW, OUTDOOR DESIGN TEMPERATURES, COIL SIZING, AVAILABILITY OF EQUIPMENT, OVERSIZING MARGIN, ETC. MUST ALSO BE CONSIDERED. IT IS THE HVAC DESIGNER'S RESPONSIBILITY TO CONSIDER ALL FACTORS WHEN SELECTING THE HVAC EQUIPMENT. MECHANICAL CONTRACTOR MUST WARRANT THE INSTALLED SYSTEM TO MEET ALL ENERGY STAR REQUIREMENTS IF APPLICABLE. THE MINIMUM SIZE OF THE RESIDENTIAL HEATING SYSTEMS IS REGULATED BY THE CALIFORNIA BUILDING CODE (CBC), SECTION 310.11. THE CBC REQUIRES THAT THE HEATING SYSTEM BE CAPABLE OF MAINTAINING A TEMPERATURE OF 70° AT A DISTANCE THREE FEET ABOVE THE FLOOR THROUGHOUT THE CONDITIONED SPACE OF THE BUILDING. DP ADVANCED ENGINEERING, INC. DOES NOT WARRANT OR ASSUME RESPONSIBILITY FOR PERFORMANCE OR INSTALLATION OF ANY EQUIPMENT LABELED OR ALLUDED TO ON ANY CALCULATION PRODUCED BY DP ADVANCED ENGINEERING, INC. BUILDER AND ALL SUB-CONTRACTORS WORKING ON THE PROJECT INVOLVING TITLE-24 UNDERSTAND AND ACCEPT ALL ASPECTS OF THE TITLE-24 SUBMITTED TO BUILDING DEPARTMENT PERTAINING TO THEIR WORK. ALL SUB-CONTRACTORS ARE RESPONSIBLE TO CONTACT THE BUILDER AND DP ADVANCED ENGINEERING, INC. BEFORE BEGINNING WORK IF THERE IS ANY ERROR IN ANY CALCULATION THAT WOULD PREVENT THE SUB-CONTRACTOR FROM WARRANTING THE PERFORMANCE OF HIS PRODUCT WHICH INCLUDED ANY ENERGY STAR PROCEDURES.

TOWN OF DANVILLE
ACCESSORY DWELLING UNIT
DANVILLE, CALIFORNIA

1
2
3
4
5
6

PLEASE NOTE THE REVISION NUMBER AND DATE ARE FOR ENERGY SHEETS ONLY.

Sheet Description:
ENERGY CALCULATIONS

2022 SINGLE FAMILY RESIDENTIAL MANDATORY MEASURES SUMMARY AND SUMMARY SHEET

Initial Issue Date: March 31, 2023
Energy Analyst: J. Bennett Ext. 26
Project Manager: J. Peek Ext. 23
Job No. W021420
Sheet No. ECM

TOWN OF DANVILLE USE ONLY

PLAN SET ID: S-ME-R-P

BROAN

BROAN ERV100
Part no. ERV100S
Low speed: 50 CFM (0.2 in. w.g.), selectable 65 CFM
High speed: 100 CFM (0.4 in. w.g.), selectable 85 CFM

CONSTRUCTION

- 22 ga. galvanized steel housing and door
- One-piece molded insulation shell, (expanded polystyrene; UL 94 HF-1 certified)
- Galvanized steel 5" diameter ports*
- Steel door hinges and latches
- Cold side ports with plastic ring; allow vapor barrier sealing
- No drain required
- Included installation brackets

*All units ports were created to be connected to ducts having a minimum of 5" diameter, but if need be, they can be connected to bigger sized ducts by using an appropriate transition (e.g.: 5" diameter to 6" diameter transition).

MOTORS

- Two high reliability, external rotor PSC motors, totally enclosed and thermally protected
- Backward blowers, can support high static pressure environment

FILTERS

- Two washable 20 ppi reticulated polyester urethane foam filters, UL 900 class 2 certified
- Optional MERV 8 filter kit, part no. V21030 (additional 0.1 in. w.g. static pressure to be considered) (sold separately)

ERV CORE

- Crossflow aluminum-polymerized paper core, UL723 certified
- Hydroscopic polymer exchange water by direct vapor transfer using molecular transport without the need of condensation
- Constructed of alternate layers of corrugated aluminum material and polymeric bactericide dessiccant impregnated media; will not promote growth of mold or bacteria
- Unique rectangular flute design to provide very low pressure drop values

ENERGY RECOVERY VENTILATOR

Controls

- Integrated push-button control for Low or High speed operation.
- For a complete list of optional main and auxiliary controls available, refer to the ***Wall Control Compatibility Chart*** on last pages of wall controls specification sheet, available at www.broan.com.
- For more details about controls, refer to the ***Main and auxiliary wall controls*** user guide, also available at www.broan.com.
- Removable terminal block included for quicker low voltage control connections.
- LED indicator shows operating modes and error codes.
- Unit must be permanently energized, no control should be installed on power supply of unit.

Air Flow

- Pressure taps and balancing chart to allow easier balancing of the unit
- Integrated balancing/backdraft dampers in cold supply and cold exhaust ports

Defrost Cycles

- Choice of regular or extended defrost cycles, according to climatic conditions
- To set extended defrost cycles, refer to unit installation manual

Regular Defrost Cycles			
Outdoor Temperature*		Defrost in Minutes / Air Exchange in Minutes	
°C	°F	Low Speed	High Speed
Warmer than -10	Warmer than 14	No defrost	No defrost
from -10 to -15	from 14 to 5	6/40	9/40
from -15 to -27	from 5 to -17	6/20	9/20
-27 and less	-17 and less	8/12	11/12

* Outdoor temperature is read by a thermistor located inside the unit, next to fresh air from outdoor port.

Warranty

The Broan ERV100 is protected by a 5-year warranty on parts only, with the original proof of purchase.

Requirements and standards

- **HVI certified**
- Complies with the UL 1812 requirements regulating the installation of Energy Recovery Ventilators
- Complies with the CSA C22.2 no. 113 Standard applicable to ventilators
- Complies with CSA C444 requirements regulating the installation of Energy Recovery Ventilators

Simplified Installation (connection to a forced air system)

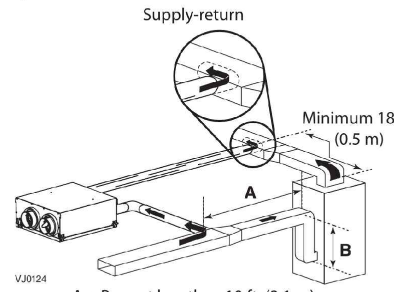

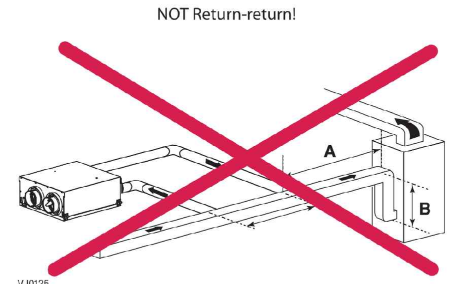

Ventilation Performance

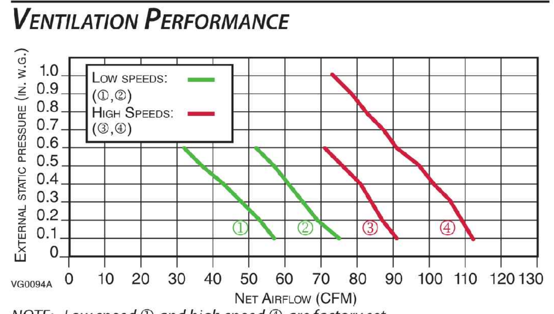

NOTE: *Low speed ① and high speed ④ are factory set, low speed ② and high speed ③ are selectable.*

Energy Performance

Supply Temperature °C	Supply Temperature °F	Net Air Flow L/s	Net Air Flow CFM	Net Air Flow m³/h	Power Consumed Watts	Sensible Recovery Efficiency	Adjusted Sensible Recovery Efficiency	Apparent Sensible Effectiveness	Latent Recovery/ Moisture Transfer
Heating									
0	32	23	48	82	40	67	73	75	0.55
0	32	30	64	109	50	65	70	73	0.51
0	32	40	85	144	64	61	66	69	0.51
-10	14	23	49	83	40	65	71	73	0.53
-25	-13	24	50	85	36	51	53	79	0.39
Cooling						Total Recovery Efficiency		Adjusted Total Recovery Efficiency	
35	95	24	50	85	40	50		53	
35	95	30	64	109	50	45		48	

NOTE: *All specifications are subject to change without notice.*

Accoustic Noise Power Chart (dBA)

Airflow	Fresh air to building port	Exhaust air from building port
100 CFM at 0.4 in. w.g.	67.8 dBA	58.3 dBA
55 CFM at 0.1 in. w.g.	58.0 dBA	49.4 dBA

The data shown on left chart come from measurement performed according to ISO 5136 Standard. These data represent the sound power directly measured at the fresh air distribution port and exhaust air from building port. To get the actual noise level in the room, consider noise attenuation resulting from total ductwork installation.

Coldshield™ Protection

- ERV unit is equipped with an electronic supplemental protection to stop air distribution in dwelling if air distribution temperature drops below freezing point, due to abnormal conditions.

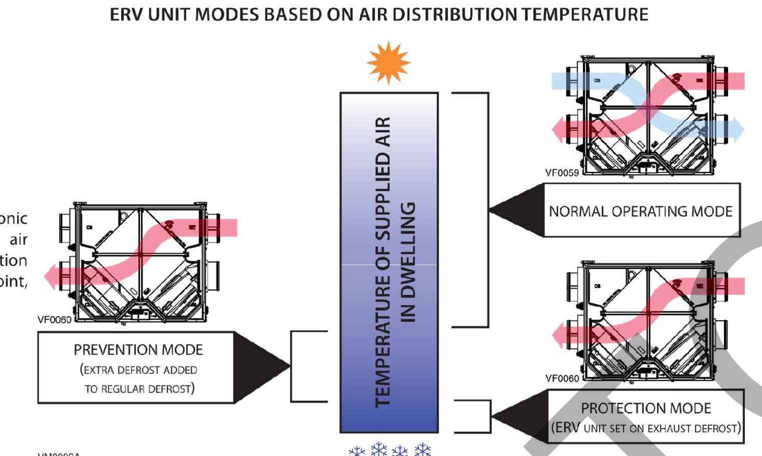

Rheem
The new degree of comfort.®

Water | Residential Electric Professional *Prestige* ProTerra Hybrid Water Heaters

Professional *Prestige*® ProTerra™ Hybrid Electric with LeakGuard™ is the most efficient water heater available

Efficiency
- Up to 4.0 UEF reduces operating cost
- ENERGY STAR® rated

Performance
- Delivers hot water faster than most standard electric water heaters
- Ambient operating range: 37-145° F is widest in class, offering more days of HP operation annually; designed to meet Northern Climate Spec (Tier 4)

Easy Installation
- Easy access side connections
- Quick access to electrical junction box
- Easily replaces a standard electric water heater

Integration
- LED Screen with built-in water sensor alert with audible alarm[1]
- Integrated EcoNet® WiFi-connected[2] technology and free mobile app gives users control over water heater, allowing for customizable temperature, vacation settings, energy savings and system monitoring at home or away. Visit Rheem.com/hybridsolutions

LEAKGUARD™ WATER SHUT-OFF VALVE

- Integrated leak detection and prevention system with factory installed auto water shut-off valve limits leaks to no more than 20 ounces of water[1, 3]
- LeakSense™ Built-in Leak Detection System detects any leak large or small, internal or external[1, 4]

Operation Modes
- Energy Saver
- Heat Pump
- High Demand
- Electric
- Vacation/Away: 2-28 days (or placed on hold indefinitely)

Plus…
- Premium grade anode rod with resistor extends the life of the tank
- 3/4" NPT water inlet and outlet; 3/4" condensate drain connections
- Incoloy stainless steel resistor elements
- Dry-fire protection
- Easy access, top mounted washable air filter
- 2" Non-CFC foam insulation
- Enhanced flow brass drain valve
- Temperature and pressure relief valve installed
- Design certified to NSF/ANSI 372 (Lead Content)

Warranty
- 10-Year limited tank and parts warranty
  See Residential Warranty Certificate for complete information

Units meet or exceed ANSI requirements and have been tested according to D.O.E. procedures. Units meet or exceed the energy efficiency requirements of NAECA, ASHRAE standard 90, ICC Code and all state energy efficiency performance criteria.

Professional *Prestige*
ProTerra Hybrid
40, 50, 65 and 80-Gallon Capacities
208-240 Volt / 1 PH Electric

LEED Points = 3

[1]Available with select models. [2]WiFi broadband internet connection required. [3]Source: Rheem Leak-Sensing Data; testing under a vacuum lock using 50-gallon tank, no expansion tank, average tank pressure of 40 psi, assuming no additional faucets are opened. [4]Water leaks from the heater only, as tested across scenarios including a minimum of 5.5mL/hr volume leak rate, using most common installation scenarios.

See specifications chart on next page.

INTEGRATED HOME COMFORT

PRINTED IN U.S.A. 06/20 WP FORM NO. HP-350-5 Rev. 2

Professional *Prestige*® ProTerra Hybrid Specifications

Nominal Gallon Capacity	Rated Gallon Capacity	Model Number	Model Variant	Electric Breaker Size	Uniform Energy Factor (UEF)	Est. Yearly Energy Cost	Compressor BTU/H	Sound Level (dBA)	UEF First Hr. Rating G.P.H.	Recovery in G.P.H 90° F Rise	Element Wattage	Total Unit Wattage	Max Amps	Unit Wt. (LBS)	Approx. Ship Wt. (LBS)
ProTerra with LeakGuard															
40	36	PROPH40 T2 RH375-SO	700646	30	3.75	$104	4,200	49	60	26	4,500	5,000	21	157	174
50	45	PROPH50 T2 RH375-SO	700643	30	3.75	$104	4,200	49	67	27	4,500	5,000	21	178	218
65	59	PROPH65 T2 RH375-SO	700644	30	3.85	$155	4,200	49	75	27	4,500	5,000	21	225	262
80	72	PROPH80 T2 RH375-SO	700645	30	4.00	$149	4,200	49	87	27	4,500	5,000	21	244	281
ProTerra 30 Amp without LeakGuard															
40	36	PROPH40 T2 RH375-30	700470	30	3.75	$104	4,200	49	60	27	4,500	5,000	21	157	174
50	45	PROPH50 T2 RH375-30	700467	30	3.75	$104	4,200	49	67	27	4,500	5,000	21	178	218
65	59	PROPH65 T2 RH375-30	700468	30	3.85	$155	4,200	49	75	27	4,500	5,000	21	225	262
80	72	PROPH80 T2 RH375-30	700469	30	4.00	$149	4,200	49	87	27	4,500	5,000	21	244	281
ProTerra 15 Amp without LeakGuard															
40	36	PROPH40 T2 RH375-15	700497	15	3.45	$78	4,200	49	46	16	2,250	2,750	12	157	174
50	45	PROPH50 T2 RH375-15	700494	15	3.75	$104	4,200	49	52	16	2,250	2,750	12	178	218
65	59	PROPH65 T2 RH375-15	700495	15	3.55	$110	4,200	49	54	16	2,250	2,750	12	225	262
80	72	PROPH80 T2 RH375-15	700496	15	3.70	$105	4,200	49	67	16	2,250	2,750	12	244	281

Estimated energy cost based on a national average electricity cost of $0.12 /kWh. Uniform Energy Factor and rated gallon capacity based on Department of Energy (DOE) requirements. All units have integrated WiFi control board.

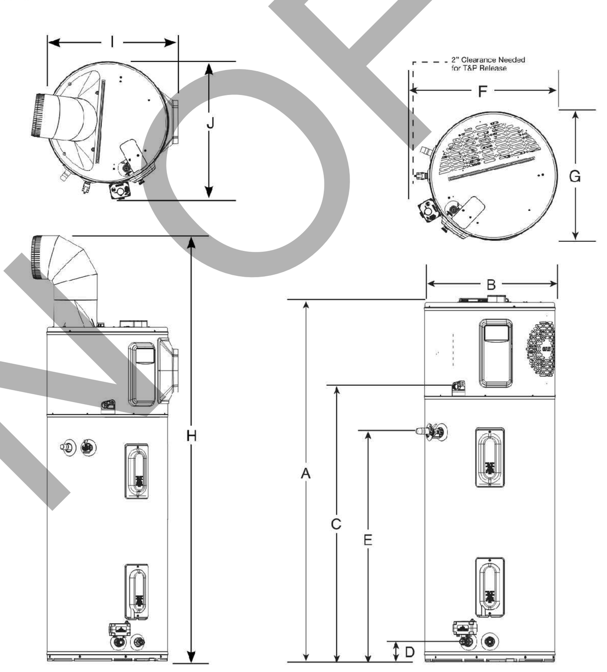

Nominal Gallon Capacity	Model Number	A	B	C	D	E	F	G	H	I	J
40	PROPH40	62-5/16	20-1/4	47	3-5/8	39-5/8	23-3/8	20-1/2	78-7/8	22-3/8	23-1/4
50	PROPH50	61-3/4	22-1/4	47	3-5/8	39-5/8	25-3/8	22-1/2	78-5/8	24-3/8	25-9/16
65	PROPH65	64-3/16	24-1/4	49	3-7/8	42-3/8	27-1/2	24-5/8	81-1/8	26-1/2	27-3/8
80	PROPH80	74-3/16	24-1/4	59	3-7/8	42-3/8	27-1/2	24-5/8	91	26-1/2	27-3/8

PEAD-A24AA7 & PUZ-A24NHA7(-BS)
MID STATIC HORIZONTAL-DUCTED INDOOR UNIT
24,000 BTU/H HEAT PUMP UNIVERSAL OUTDOOR

MITSUBISHI ELECTRIC

Job Name:
System Reference: Date:

Indoor Unit PEAD-A24AA7
Outdoor Unit
Standard Model PUZ-A24NHA7
Seacoast Model PUZ-A24NHA7-BS

INDOOR UNIT FEATURES
- Unobtrusive ceiling-concealed design for short-run ductwork
- Wide ranging external static pressure (0.14-0.60 in. WG)
- Built-in condensate lift mechanism (up to 27-9/16")
- Auto fan speed mode
- Optional FB Series filter boxes for easy access and service
- Ideal for residential homes, retail shopping centers, larger classrooms, office complexes, conference rooms, ballrooms, fitness centers, and more
- Multiple control options available:
  - kumo cloud® smart device app for remote access
  - Third-party interface options
  - Wired or wireless controllers

OUTDOOR UNIT FEATURES
- Variable speed INVERTER-driven compressor
- Power receiver pre-charged with refrigerant volume for piping length up to 70 ft
- Low ambient cooling down to 0°F providing 100% capacity
- 24-hour continuous operation (cooling mode)
- High pressure protection
- Fast restart
- Superior energy and operational efficiency

Specifications are subject to change without notice.
© 2021 Mitsubishi Electric Trane HVAC US LLC. All rights reserved.

SPECIFICATIONS: PEAD-A24AA7 & PUZ-A24NHA7(-BS)

Cooling at 95°F[1]	Maximum Capacity	BTU/H	24,000
	Rated Capacity	BTU/H	24,000
	Minimum Capacity	BTU/H	10,000
	Maximum Power Input	W	2,050
	Rated Power Input	W	2,050
	Moisture Removal	Pints/h	6.9
	Sensible Heat Factor		0.68
	Power Factor	%	92.8/92.8
Heating at 47°F[2]	Maximum Capacity	BTU/H	28,000
	Rated Capacity	BTU/H	26,000
	Minimum Capacity	BTU/H	9,000
	Maximum Power Input	W	2,200
	Rated Power Input	W	1,750
	Power Factor	%	92.8/92.8
Heating at 17°F[3]	Maximum Capacity	BTU/H	17,200
	Rated Capacity	BTU/H	14,800
	Maximum Power Input	W	1,700
	Rated Power Input	W	1,630
Heating at 5°F[4]	Maximum Capacity	BTU/H	14,300
	Maximum Power Input	W	1,800
Efficiency	SEER		19.6
	EER[1]		11.7
	HSPF [IV]		10.8
	COP at 47°F[2]		4.35
	COP at 17°F at Maximum Capacity[3]		2.97
	COP at 5°F at Maximum Capacity[4]		2.33
	ENERGY STAR® Certified		No
Electrical	Voltage, Phase, Frequency		208/230, 1, 60
	Guaranteed Voltage Range	V AC	198 - 253
	Voltage: Indoor - Outdoor, S1-S2	V AC	208/230
	Voltage: Indoor - Outdoor, S2-S3	V DC	24
	Short-circuit Current Rating [SCCR]	kA	5
	Recommended Fuse/Breaker Size (Outdoor)	A	25
	Recommended Wire Size [Indoor - Outdoor]	AWG	14
	Power Supply		Indoor unit is powered by the outdoor unit
Indoor Unit	MCA	A	2.63
	Fan Motor Full Load Amperage	A	2.1
	Fan Motor Output	W	121
	Fan Motor Type		DC Motor
	Airflow Rate at Cooling, Dry	CFM	512–635–741
	Airflow Rate at Cooling, Wet	CFM	461–572–667
	Airflow Rate at Heating, Dry	CFM	512–635–741
	Sound Pressure Level [Cooling]	dB[A]	30–33–37
	Sound Pressure Level [Heating]	dB[A]	30–33–37
	External Static Pressure	in.WG	0.14–0.2–0.28–0.4–0.6
	Drain Pipe Size	In. [mm]	1-1/4 [32]
	Condensate Lift Mechanism, Maximum Distance	In. [mm]	27-9/16 [700]
	Coating on Heat Exchanger		—
	External Finish Color		Galvanized
	Unit Dimensions	W x D x H: In. [mm]	43-5/16 x 28-7/8 x 9-7/8 [1100 x 732 x 250]
	Package Dimensions	W x D x H: In. [mm]	53-3/16 x 34-11/16 x 13-7/16 [1350 x 880 x 341]
	Unit Weight	Lbs. [kg]	69 [31]
	Package Weight	Lbs. [kg]	82 [37]
Indoor Unit Operating Temperature Range	Cooling Intake Air Temp [Maximum / Minimum]*	°F	90 DB, 72 WB / 66 DB, 61 WB
	Heating Intake Air Temp [Maximum / Minimum]	°F	77 DB / 59 DB

NOTES:
AHRI Rated Conditions (Rated data is determined at a fixed compressor speed)
[1]Cooling (Indoor // Outdoor) °F 80 DB, 67 WB // 95 DB, 75 WB
[2]Heating at 47°F (Indoor // Outdoor) °F 70 DB, 60 WB // 47 DB, 43 WB
[3]Heating at 17°F (Indoor // Outdoor) °F 70 DB, 60 WB // 17 DB, 15 WB

Conditions
[4]Heating at 5°F (Indoor // Outdoor) °F 70 DB, 60 WB // 5 DB, 4 WB
[5]Heating at -4°F (Indoor // Outdoor) °F 70 DB, 60 WB // -4 DB, -5 WB
[6]Heating at -5°F (Indoor // Outdoor) °F 70 DB, 60 WB // -5 DB, -6 WB
[7]Heating at -13°F (Indoor // Outdoor) °F 70 DB, 60 WB // -13 DB, -14 WB

*Outdoor Unit Operating Temperature Range (Cooling Air Temp (Maximum / Minimum)):
- Wind baffles required to operate below 23°F DB in cooling mode.
- Heat pump system with wind baffle: 0°F - 115°F.
- Refer to wind baffle documentation for further information.

**Outdoor Unit Operating Temperature Range (Cooling Thermal Lock-out / Re-start Temperatures; Heating Thermal Lock-out / Re-start Temperatures):
- System cuts out in heating mode to avoid thermistor error and automatically restarts at these temperatures.

SEACOAST PROTECTION (-BS MODELS)
- External Outer Panel: Phosphate coating + Acrylic-Enamel coating
- Fan Motor Support: Epoxy resin coating (at edge face)
- Separator Assembly Valve Bed: Epoxy resin coating (at edge face)
- Blue Fin treatment is an anti-corrosion treatment that is applied to the condenser coil to protect it against airborne contaminants.

Specifications are subject to change without notice.
© 2021 Mitsubishi Electric Trane HVAC US LLC. All rights reserved.

AHRI CERTIFIED® www.ahridirectory.org

Certificate of Product Ratings

AHRI Certified Reference Number : 201754461 Date : 03-30-2023 Model Status : Active
AHRI Type : HRCU-A-CB (Mini-Split System: Heat Pump with Outdoor Unit-Air-Source, Ducted)
Series Name : P-Series
Outdoor Unit Brand Name : Mitsubishi Electric
Outdoor Unit Model Number : PUZ-A24NHA7***
Indoor Type : Mini-Splits (Ducted)
Indoor Model Number(s) : PEAD-A24AA*

Rated as follows in accordance with the latest edition of AHRI 210/240 - 2017 with Addendum 1, Performance Rating of Unitary Air-Conditioning & Air-Source Heat Pump Equipment and subject to rating accuracy by AHRI-sponsored, independent, third party testing:

Cooling Capacity (A2) - Single or High Stage (95F), btuh : 24000
SEER : 19.60
EER (A2) - Single or High Stage (95F) : 11.70
Heating Capacity (H12) - Single or High Stage (47F) : 26000
HSPF (Region IV) : 10.80

Rated as follows in accordance with the latest edition of AHRI 210/240 – 2023, Performance Rating of Unitary Air-Conditioning & Air-Source Heat Pump Equipment and subject to rating accuracy by AHRI-sponsored, independent, third party testing:

Cooling Capacity (AFull) – Single or High Stage (95F), btuh : 24400
SEER2 : 19.20
EER2 (AFull) – Single or High Stage (95F) : 12.00
Heating Capacity (H1Full) – Single or High Stage (47F), btuh : 29400
HSPF2 (Region IV) : 9.10
Sold in? : USA, Canada

†"Active" Model Status are those that an AHRI Certification Program Participant is currently producing AND selling or offering for sale; OR new models that are being marketed but are not yet being produced."Production Stopped" Model Status are those that an AHRI Certification Program Participant is no longer producing BUT is still selling or offering for sale.

Ratings that are accompanied by WAS indicate an involuntary re-rate. The new published rating is shown along with the previous (i.e. WAS) rating.

The Department of Energy has published updated energy efficiency metrics for central air conditioners and heat pumps. This publication reflects both the 1987 metric (SEER) and the 2023 metric (SEER2). Efficiency requirements are published at 10 C.F.R. 430.32(c). Please refer to www.AHRInet.org for more information about updated energy efficiency metrics.

DISCLAIMER
AHRI does not endorse the product(s) listed on this Certificate and makes no representations, warranties or guarantees as to, and assumes no responsibility for, the product(s) listed on this Certificate. AHRI expressly disclaims all liability for damages of any kind arising out of the use or performance of the product(s), or the unauthorized alteration of data listed on this Certificate. Certified ratings are valid only for models and configurations listed in the directory at www.ahridirectory.org.

TERMS AND CONDITIONS
This Certificate and its contents are proprietary products of AHRI. This Certificate shall only be used for individual, personal and confidential reference purposes. The contents of this Certificate may not, in whole or in part, be reproduced; copied; disseminated; entered into a computer database; or otherwise utilized, in any form or manner or by any means, except for the user's individual, personal and confidential reference.

CERTIFICATE VERIFICATION
The information for the model cited on this certificate can be verified at www.ahridirectory.org, click on "Verify Certificate" link and enter the AHRI Certified Reference Number and the date on which the certificate was issued, which is listed above, and the Certificate No., which is listed at bottom right.

AHRI AIR-CONDITIONING, HEATING, & REFRIGERATION INSTITUTE we make life better™

©2023 Air-Conditioning, Heating, and Refrigeration Institute

CERTIFICATE NO.: 133247014402997907

ADVANCED ENGINEERING
3381 Walnut Blvd. Ste. 220
Brentwood, CA 94513
Office: 925.516.3502
Fax: 925.262.4662

NOTE: THE LOADS SHOWN ARE ONLY ONE OF THE CRITERIA AFFECTING THE SELECTION OF HVAC EQUIPMENT. OTHER RELEVANT DESIGN FACTORS SUCH AS AIRFLOW, OUTDOOR DESIGN TEMPERATURES, COIL SIZING, AVAILABILITY OF EQUIPMENT, OVERSIZING MARGIN, ETC. MUST ALSO BE CONSIDERED. IT IS THE HVAC DESIGNER'S RESPONSIBILITY TO CONSIDER ALL FACTORS WHEN SELECTING THE HVAC EQUIPMENT. MECHANICAL CONTRACTOR MUST WARRANT THE INSTALLED SYSTEM TO MEET ALL ENERGY STAR REQUIREMENTS IF APPLICABLE. THE MINIMUM SIZE OF THE RESIDENTIAL HEATING SYSTEMS IS REGULATED BY THE CALIFORNIA BUILDING CODE (CBC), SECTION 310.11. THE CBC REQUIRES THAT THE HEATING SYSTEM BE CAPABLE OF MAINTAINING A TEMPERATURE OF 70° AT A DISTANCE THREE FEET ABOVE THE FLOOR THROUGHOUT THE CONDITIONED SPACE OF THE BUILDING. DP ADVANCED ENGINEERING, INC. DOES NOT WARRANT OR ASSUME RESPONSIBILITY FOR PERFORMANCE OR INSTALLATION OF ANY EQUIPMENT LABELED OR ALLUDED TO ON ANY CALCULATION PRODUCED BY DP ADVANCED ENGINEERING, INC. BUILDER AND ALL SUB-CONTRACTORS WORKING ON THE PROJECT INVOLVING TITLE-24 UNDERSTAND AND ACCEPT ALL ASPECTS OF THE TITLE-24 SUBMITTED TO BUILDING DEPARTMENT PERTAINING TO THEIR WORK. ALL SUB-CONTRACTORS ARE RESPONSIBLE TO CONTACT THE BUILDER AND DP ADVANCED ENGINEERING, INC. BEFORE BEGINNING WORK IF THERE IS ANY ERROR IN ANY CALCULATION THAT WOULD PREVENT THE SUB-CONTRACTOR FROM WARRANTING THE PERFORMANCE OF HIS PRODUCT WHICH INCLUDED ANY ENERGY STAR PROCEDURES.

TOWN OF DANVILLE
ACCESSORY DWELLING UNIT
DANVILLE, CALIFORNIA

1
2
3
4
5
6

PLEASE NOTE THE REVISION NUMBER AND DATE ARE FOR ENERGY SHEETS ONLY.

Sheet Description:
ENERGY CALCULATIONS

SUBMITTAL SHEETS FOR EQUIPMENT

Initial Issue Date: March 31, 2023
Energy Analyst: J. Bennett Ext. 26
Project Manager: J. Peek Ext. 23
Job No. W021420
Sheet No. ECS

PLAN SET ID: S-ME-R-P

TOWN OF DANVILLE USE ONLY

GENERAL NOTES

1. ALL MATERIAL AND WORKMANSHIP SHALL CONFORM TO THE 2022 EDITION OF THE CALIFORNIA BUILDING CODE (CBC); THE MOST RECENT VERSIONS OF THE CMC, CPC AND CEC; ALL APPLICABLE LOCAL CODES AND ORDINANCES; AND LOCALLY ACCEPTED STANDARDS OF PRACTICE.
2. THESE DRAWINGS AND SPECIFICATIONS HAVE BEEN PREPARED EXCLUSIVELY FOR USE ON THIS PROJECT ONLY. THE DRAWINGS AND SPECIFICATIONS, OR PORTIONS THEREOF, SHALL NOT BE USED ON OTHER PROJECTS OR ADDITIONS TO THIS PROJECT EXCEPT BY AGREEMENT IN WRITING AND WITH APPROPRIATE COMPENSATION OF THE ENGINEER.
3. WRITTEN INFORMATION AND DIMENSIONS SHALL TAKE PRECEDENCE OVER GRAPHIC INFORMATION.
4 STRUCTURAL DRAWINGS SHOW ONLY THE BASIC STRUCTURAL SYSTEMS. REFER TO THE ARCHITECTURAL, MECHANICAL, ELECTRICAL AND CIVIL DRAWINGS FOR ITEMS WHICH REQUIRE SPECIAL PROVISIONS DURING CONSTRUCTION.
5. SEE DRAWINGS OTHER THAN STRUCTURAL FOR: TYPES OF FINISH MATERIALS AND THEIR LOCATIONS, FOR DEPRESSIONS IN FLOOR SLABS, FOR OPENINGS IN WALLS AND FLOORS REQUIRED BY ARCHITECTURAL AND MECHANICAL FEATURES, FOR STAIRS, CURBS, ETC.
6. ALL DETAIL REFERENCES SHALL BE CONSIDERED "TYPICAL". THE INTENT OF TYPICAL DETAILS SHALL BE APPLIED TO SIMILAR CONDITIONS ELSEWHERE IN THE PROJECT. WHEN DETAILS LABELED "SIMILAR" ARE GIVEN ON DRAWINGS, THE CONTRACTOR SHALL APPLY THE GENERAL INTENT OF THE DETAIL TO THE REFERENCED CONDITION.
7. **THE CONTRACTOR SHALL REVIEW ALL DRAWINGS IMMEDIATELY UPON RECEIPT AND SHALL VERIFY ALL DIMENSIONS AND SITE CONDITIONS BEFORE STARTING WORK. THE ENGINEER SHALL BE NOTIFIED OF ANY DISCREPANCIES.**
8. STRUCTURAL DRAWINGS AND SPECIFICATIONS FOR THIS WORK HAVE BEEN PREPARED IN ACCORDANCE WITH GENERALLY ACCEPTED ENGINEERING STANDARDS OF PRACTICE TO MEET THE MINIMUM REQUIREMENTS OF THE APPLICABLE EDITION OF THE CBC. ANY OMISSIONS OR DISCREPANCIES ON THE PLANS OR ANY DEVIATIONS FROM THE PLANS THAT ARE NECESSITATED BY FIELD CONDITIONS OR ANY CONDITION DIFFERENT FROM THOSE INDICATED ON THE PLANS SHOULD BE BROUGHT TO THE ATTENTION OF THE ENGINEER PRIOR TO CONTINUING CONSTRUCTION. ALL WORK SHALL BE COORDINATED SO COOPERATION BETWEEN THE TRADES IS ACCOMPLISHED.
9. CONNECTIONS AND IMPLIED CONSTRUCTION ASSEMBLIES THAT ARE NOT SPECIFICALLY DESCRIBED OR DETAILED SHALL BE CONSTRUCTED USING STANDARD CONSTRUCTION PRACTICES IN COMPLIANCE WITH THE GOVERNING CODES AND LOCAL ORDINANCES.
10. THE STRUCTURAL SYSTEMS HAVE BEEN DESIGNED TO CARRY THE SUPERIMPOSED LIVE LOADS AS PRESCRIBED BY THE CALIFORNIA BUILDING CODE AND IN ACCORDANCE WITH STANDARD ENGINEERING PRACTICES, WITH NO SPECIAL PROVISIONS TO CARRY CONCENTRATED LOADS FROM STORAGE AND HANDLING OF CONSTRUCTION MATERIALS OR FROM OPERATION OF CONSTRUCTION EQUIPMENT.
11. DRAWINGS AND SPECIFICATIONS REPRESENT FINISHED STRUCTURE. CONTRACTOR SHALL BE RESPONSIBLE FOR MEANS AND METHODS OF CONSTRUCTION, INCLUDING BUT NOT LIMITED TO SHORING AND TEMPORARY BRACING. THE CONTRACTOR SHALL TAKE ALL NECESSARY MEASURE TO INSURE SAFETY OF ALL PERSONS AND STRUCTURES AT THE SITE AND ADJACENT TO THE SITE. OBSERVATION VISITS TO THE SITE BY THE ARCHITECT, ENGINEER OR CONSTRUCTION MANAGER SHALL NOT RELIEVE THE CONTRACTOR OF SUCH RESPONSIBILITY.
12. THE CONTRACTOR IS RESPONSIBLE FOR AND SHALL MAINTAIN THE INTEGRITY OF ALL SCAFFOLDING, BRACING, AND SHORING SYSTEMS AS REQUIRED FOR INSTALLATION, STABILITY AND SAFETY OF NEW WORK AND EXISTING STRUCTURES, PIPING, AND FOUNDATION SYSTEMS. CONTRACTOR SHALL ALSO PROVIDE FOR THE SAFETY OF PEDESTRIANS AND JOB SITE PERSONNEL. AT ALL TIMES, THE CONTRACTOR SHALL BE SOLELY AND COMPLETELY RESPONSIBLE FOR THE CONDITION OF THE JOB SITE, INCLUDING SAFETY OF PERSONS AND PROPERTY. THE CONTRACTOR SHALL PROTECT NEW AND EXISTING CONSTRUCTION FROM INCLEMENT WEATHER AND PHYSICAL DAMAGE.
13. CONTRACTOR SHALL COORDINATE WITH THE CITY TO ENSURE ALL INSPECTIONS (INCLUDING SPECIAL INSPECTIONS) ARE COMPLETED PER THE LOCAL BUILDING DEPARTMENT REQUIREMENTS. APPROVALS BY BUILDING INSPECTORS SHALL NOT CONSTITUTE AUTHORITY TO DEVIATE FROM THE PLANS AND SPECIFICATIONS.
14. IF PROVIDED, OBSERVATION OF THE CONSTRUCTION BY THE ENGINEER IS INTENDED TO IMPROVE THE PROBABILITY THAT THE WORK IS COMPLETED IN GENERAL CONFORMANCE WITH THE ENGINEERING INTENT OF THE DESIGN. OBSERVATION OF THE CONSTRUCTION BY THE ENGINEER DOES NOT RELIEVE THE CONTRACTOR OF THE RESPONSIBILITY FOR COMPLETING THE CONSTRUCTION IN ACCORDANCE WITH THE APPROVED CONSTRUCTION DOCUMENTS, GENERALLY ACCEPTED STANDARDS OF PRACTICE, AND CITY/COUNTY REQUIRED INSPECTIONS.
15. ALL FRAMING HARDWARE SHALL BE MANUFACTURED BY SIMPSON STRONGTIE, OR EQUAL. ALTERNATE FRAMING HARDWARE MANUFACTURERS SHALL NOT BE PROVIDED UNLESS SPECIFICALLY AUTHORIZED BY THE ENGINEER AND THE BUILDING OWNER. IF ALTERNATE HARDWARE SYSTEMS ARE AUTHORIZED, THE CONTRACTOR SHALL FORWARD COMPLETE SHOP DRAWINGS FOR REVIEW AND APPROVAL.

FOUNDATION NOTES

1. FOOTING DEPTH DIMENSION ARE INTO UNDISTURBED SOIL OR ENGINEERED FILL APPROVED BY THE GEOTECHNICAL ENGINEER, IF APPLICABLE. FINAL FOOTING DEPTH SHALL BE MEASURED FROM LOWEST ADJACENT GRADE OR BOTTOM OF UNAPPROVED FILL.
2. REMOVE LOOSE SOIL AND STANDING WATER FROM FOUNDATION EXCAVATIONS PRIOR TO PLACING CONCRETE. THE GEOTECHNICAL ENGINEER (IF APPLICABLE) SHALL INSPECT AND APPROVE ALL EXCAVATIONS, SOIL COMPACTION WORK PRIOR TO PLACEMENT OF ANY REBAR OR CONCRETE, SHORING INSTALLATIONS, BACKFILL MATERIALS AND BACK FILLING PROCEDURES.
3. MINIMUM CLEARANCE OF 8" SHALL BE PROVIDED BETWEEN EARTH AND WOOD IN ALL LOCATIONS PER CBC 2304.12
4. DRAINAGE AND SURFACE RUNOFF:
   PERIMETER GRADES SHOULD BE POSITIVELY SLOPED AT ALL TIMES TO PROVIDE FOR RAPID REMOVAL OF SURFACE WATER RUNOFF AWAY FROM THE FOUNDATION SYSTEMS AND TO PREVENT PONDING OF WATER UNDER FOUNDATIONS OR SEEPAGE TOWARD THE FOUNDATION SYSTEMS AT ANY TIME DURING OR AFTER CONSTRUCTION. PONDED WATER MAY CAUSE UNDESIRABLE SOIL SWELL OR SETTLEMENT AND LOSS OF STRENGTH.
   A. AS A MINIMUM REQUIREMENT, FINISHED GRADES SHOULD HAVE SLOPES OF AT LEAST 5 PERCENT WITHIN 10 FEET FROM THE EXTERIOR WALLS AND AT RIGHT ANGLES TO ALLOW SURFACE WATER TO DRAIN POSITIVELY AWAY FROM THE STRUCTURE. FOR PAVED AREAS, THE SLOPE GRADIENT CAN BE REDUCED TO 2 PERCENT.
   B. ALL SURFACE WATER SHOULD BE COLLECTED AND DISCHARGED INTO APPROVED DRAINAGE FACILITIES. APPROVED DRAINAGE FACILITIES SHALL BE PACIFIED BY THE THE CIVIL ENGINEER, IF APPLICABLE.
   C. ALL ROOF STORMWATER SHOULD BE COLLECTED AND DIRECTED TO DOWNSPOUTS. STORMWATER FROM ROOF DOWNSPOUTS SHOULD NOT BE ALLOWED TO DISCHARGE DIRECTLY ONTO THE GROUND SURFACE IN CLOSE PROXIMITY TO THE FOUNDATION SYSTEM. RATHER, STORMWATER FROM ROOF DOWNSPOUTS SHOULD BE DIRECTED BY AN IMPERMEABLE SURFACE INTO THE STREET OR TO AN APPROVED DRAINAGE FACILITY. IF THIS IS NOT ACCEPTABLE, WE RECOMMEND DOWNSPOUTS DISCHARGE AT LEAST 5 FEET AWAY FROM FOUNDATIONS.
5. OVER-OPTIMUM SOIL MOISTURE CONDITIONS:
   THE CONTRACTOR SHOULD ANTICIPATE ENCOUNTERING EXCESSIVELY OVER-OPTIMUM (WET) SOIL MOISTURE CONDITIONS DURING WINTER OR SPRING GRADING, OR DURING OR FOLLOWING PERIODS OF RAIN. IN ADDITION, WET SOIL CONDITIONS MAY BE ENCOUNTERED NEAR THE BOTTOM OF EXCAVATIONS. WET SOIL CAN MAKE PROPER COMPACTION DIFFICULT OR IMPOSSIBLE. WET SOIL CONDITIONS SHALL BE MITIGATED BY APPROVED MEANS.
6. OVER-OPTIMUM SOIL MOISTURE CONDITIONS:
   WHERE MOISTURE VAPOR TRANSMISSION IS A CONCERN, CONSULT A WATERPROOFING EXPERT. MOISTURE TRANSITION IS OUTSIDE THE SCOPE OF THESE PLANS.
   A. A TOUGH, WATER VAPOR RETARDING MEMBRANE SHOULD BE INSTALLED BELOW ALL SLAB FOUNDATIONS SYSTEMS TO REDUCE MOISTURE CONDENSATION UNDER FLOOR COVERINGS. THE VAPOR RETARDER SHOULD MEET ASTM E 1745 CLASS A REQUIREMENTS FOR WATER VAPOR PERMEANCE, TENSILE STRENGTH, AND PUNCTURE RESISTANCE. VAPOR TRANSMISSION THROUGH THE SLAB FOUNDATIONS CAN ALSO BE REDUCED BY USING HIGH STRENGTH CONCRETE WITH A LOW WATER-CEMENT RATIO.
7. DEEPEN PERIMETER FOOTINGS AS REQUIRED WHERE FOOTING, OR EDGE OF SLAB, IS WITHIN 3'-0" OF EDGE OF BIO-SWALE, BIO-RETENTION FACILITIES, TRENCHES, ETC. DEEPEN FOOTING SUCH THAT A 1:1 PLANE IS MAINTAINED BETWEEN BOTTOM OF FOOTING AND BOTTOM OF ADJACENT EXCAVATION. SEE DTL. 207/SD2 FOR MORE INFORMATION.
8. IT IS THE RESPONSIBILITY OF THE CONTRACTOR TO LOCATE AND PROTECT EXISTING UTILITIES TO REMAIN DURING AND/OR AFTER CONSTRUCTION.
9. CONTRACTOR TO REMOVE ABANDONED FOOTINGS, UTILITIES, ETC. WHICH INTERFERE WITH NEW CONSTRUCTION, UNLESS OTHERWISE INDICATED. NOTIFY THE OWNER'S REPRESENTATIVE IF ANY BURIED STRUCTURES NOT INDICATED, SUCH AS CESSPOOLS, CISTERNS, FOUNDATIONS, ETC., ARE FOUND.
10. THE CONTRACTOR IS SOLELY RESPONSIBLE FOR EXCAVATION PROCEDURES INCLUDING LAGGING, SHORING, UNDERPINNING AND PROTECTION OF EXISTING CONSTRUCTION.
11. PLACE BACKFILL BEHIND RETAINING WALLS AFTER CONCRETE OR MASONRY HAS ATTAINED FULL DESIGN STRENGTH. BRACE BUILDING AND PIT WALLS BELOW GRADE FROM LATERAL LOADS UNTIL ATTACHED FLOORS AND SLABS ON GRADE ARE COMPLETE AND HAVE ATTAINED FULL DESIGN STRENGTH.

SHEARWALL NOTES

1. WHERE A STRUCTURAL SHEARWALL IS INDICATED ON PLANS THE ASSEMBLY SHALL RUN HORIZONTALLY AND CONTINUOUSLY TO THE NEAREST WALL OPENING OR END OF THE WALL; THE ASSEMBLY SHALL RUN VERTICALLY CONTINUOUSLY FROM THE BOTTOM OF THE NEAREST SOLE OR BOTTOM PLATE UP TO THE TOP OF THE NEAREST DOUBLE TOP PLATE (OR BEAM). ALL PLYWOOD PANEL EDGES SHALL BE BLOCKED AND EDGE NAILED.
2. WHERE HOLDOWN POSTS OR STUDS ARE INDICATED AT THE END OF A SHEARWALL, THE SHEAR PLYWOOD SHALL BE EDGE NAILED AND THE POST SHALL RUN CONTINUOUSLY FROM THE SOLE PLATE TO THE DOUBLE TOP PLATE. HOLDOWNS SHALL BE ATTACHED TO POSTS AT THE ENDS OF SHEARWALLS AND SHALL EXTEND TO EITHER FRAMING BELOW OR TO FOUNDATION AS SHOWN ON PLANS.
3. SEE SHEARWALL SCHEDULE ON PLANS FOR REQUIRED SHEARWALL NAILING, ANCHOR BOLTS, SILL NAILS, AND OTHER SHEAR TRANSFER HARDWARE.
4. SHEARWALL PLYWOOD SHALL NOT BE CUT FOR PIPE, DUCTS, SLEEVES, ETC., U.N.O. OR DETAILED.
5. UNLESS OTHERWISE DETAILED, ALL INTERIOR SHEARWALLS SHALL BE CONTINUOUS TO THE ROOF OR FLOOR PLYWOOD IN ACCORDANCE WITH THE TYPICAL SHEAR TRANSFER DETAILS
6. PLYWOOD SHEETS LOCATED AT SHEARWALL EDGES SHALL BE AT LEAST 12" WIDE. PLYWOOD EDGES SHALL BE EDGE NAILED TO ALL SHEARWALL FRAMING MEMBERS. SEE SHEARWALL SCHEDULE FOR FIELD NAILING REQUIREMENTS.
7. SEE SHEARWALL SCHEDULE FOR SHEARWALLS THAT REQUIRE 3x MUDSILLS AND 3x FRAMING AT ADJOINING PLYWOOD PANEL EDGES. SILL PLATES, TOP PLATES AND MEMBERS IN THE FIELD OF INDIVIDUAL PLYWOOD PANELS DO NOT TYPICALLY BACK ADJOINING PANEL EDGES AND THUS MAY BE 2x.

OBSERVATION OF CONSTRUCTION

1. IN ADDITION TO OBSERVATIONS BY THE SOILS ENGINEER(IF APPLICABLE), AND CITY INSPECTOR, OBSERVATION OF THE CONSTRUCTION BY THE PROJECT ENGINEER IS RECOMMENDED FOR THIS PROJECT. THE CONTRACTOR SHALL PHASE THE PROJECT AND COORDINATE WITH THE ENGINEER TO ENSURE THAT THE PRIMARY STRUCTURAL ELEMENTS OF THE CONSTRUCTION ARE OBSERVED PRIOR TO COVERING WITH FINISHES OR OTHER MATERIALS. AS A MINIMUM, OBSERVATION BY THE ENGINEER IS RECOMMENDED AS FOLLOWS:
   A. REINF. STEEL AND HARDWARE EMBEDDED IN THE FNDTION SHALL BE OBSERVED PRIOR TO CONCRETE PLACEMENT
   B. SHEARWALLS AND FRAMING ELEMENTS SHALL BE OBSERVED PRIOR TO INSTALLATION OF FINISHES.
2. OBSERVATION OF THE CONSTRUCTION BY THE ENGINEER DOES NOT RELIEVE THE CONTRACTOR FROM RESPONSIBILITY TO COMPLETE THE CONSTRUCTION IN CONFORMANCE WITH THE PROJECT DOCUMENTS AND GENERALLY ACCEPTED STANDARDS OF PRACTICE. THE PURPOSE OF OUR VISITS WILL BE TO BECOME GENERALLY FAMILIAR WITH THE PROGRESS AND QUALITY OF THE CONTRACTOR'S WORK AND DETERMINE IF THE WORK IS PROGRESSING IN GENERAL CONFORMANCE WITH OUR DESIGN INTENT. DURING OUR VISITS, ADVANCED ENGINEERING WILL NOT BE MAKING DETAILED INSPECTIONS, OR VERIFYING DIMENSIONS. THE CONTRACTOR IS RESPONSIBLE FOR FOLLOWING APPLICABLE CODES AND THE APPROVED CONSTRUCTION DOCUMENTS.

SPECIAL INSPECTIONS PER 2022 CBC 1701

1. IN ADDITION TO OBSERVATIONS BY THE CITY INSPECTOR AND THE PROJECT ENGINEER, SPECIAL INSPECTIONS BY AN ICC CERTIFIED SPECIAL INSPECTOR IS REQUIRED AS FOLLOWS:
   A. EPOXY ANCHORS INSTALLED IN CONCRETE SHALL HAVE SPECIAL INSPECTION OF HOLE DEPTH & DIAMETER, MATERIALS, CLEANING PROCEDURES, AND INSTALLATION PER ICC-REPORT ICC-ES/ESR-2508 SECTION 4.4.3.
   B. TITEN HD ANCHORS INSTALLED IN CONCRETE SHALL HAVE SPECIAL INSPECTION OF DRILLING AND INSTALLATION PER ICC-REPORT ICC-ES/ESR-2713 SECTION 4.4.
   C. PERIODIC SPECIAL INSPECTION IS REQUIRED FOR NAILING, BOLTING, ANCHORING, AND OTHER FASTENING OF COMPONENTS WITHIN THE SEISMIC-FORCE-RESISTING SYSTEM, INCLUDING WOOD SHEAR WALLS, WOOD DIAPHRAGMS, DRAG STRUTS, BRACES, SHEAR PANELS AND HOLDDOWNS PER SECTION 1705.12.2 OF THE CURRENT EDITION OF THE C.B.C.
   D. CONTINUOUS INSPECTIONS OF CAST-IN-PLACE DEEP FOUNDATION (PIERS) OR DRILLING OPERATIONS. COMPLETE AND ACCURATE RECORDS FOR EACH ELEMENT SHALL BE PROVIDED PER SECTION 1705.8 OF THE CURRENT EDITION OF THE C.B.C.
   E. CONTINUOUS INSPECTIONS OF CAST-IN-PLACE DEEP FOUNDATION (PIERS) TO VERIFY: PLACEMENT LOCATIONS AND PLUMBNESS, CONFIRM ELEMENT DIAMETERS, LENGTHS, AND EMBEDMENTS PER SECTION 1705.8 OF THE CURRENT EDITION OF THE C.B.C.
2. THE CONTRACTOR SHALL COORDINATE WITH THE CITY TO ENSURE SPECIAL INSPECTION IS PROVIDED PER CITY REQUIREMENTS. THE SPECIAL INSPECTOR SHALL BE EMPLOYED BY THE OWNER AND MUST DEMONSTRATE HIS QUALIFICATIONS TO THE ARCHITECT/ENGINEER OF RECORD AND THE BUILDING OFFICIAL.

FASTENING SCHEDULE (C.B.C. TABLE 2304.10.2) △1

ITEM	DESCRIPTION OF CONNECTION	FASTENING (NOTE 1, 4, 8)		
		COMMON / BOX	SMOOTH SHANK	STAPLES
1	JOIST TO SILL OR GIRDER, TOE-NAIL	(3) 8d	(3) 3" x 0.131"	(3) 3"-14 GA.
2	BRIDGING TO JOIST, TOE-NAIL EA. END	(2) 8d	(2) 3" x 0.131"	(2) 3"-14 GA.
3	1" x 6" SUBFLOOR OR LESS, TO EACH JOIST, FACE NAIL	(2) 8d	N.A.	N.A.
4	WIDER THAN 1" x 6" SUBFLOOR TO EACH JOIST, FACE NAIL	(3) 8d	N.A.	N.A.
5	2" SUBFLOOR TO JOIST OR GIRDER, BLIND AND FACE NAIL	(2) 16d	N.A.	N.A.
6	SOLE PLATE TO JOIST OR BLOCKING, TYPICAL FACE NAIL	16d AT 16"	3" x 0.131" AT 8" O.C.	3"-14 GA. AT 12" O.C.
	SOLE PLATE TO JOIST OR BLOCKING, AT BRACED WALL PANELS	(3) 16d AT 16"	(4) 3" x 0.131" AT 16" O.C.	(4) 3"-14 GA. PER 16" O.C.
7	TOP PLATE TO STUD, END NAIL	(2) 16d	(3) 3" x 0.131"	(3) 3"-14 GA.
8	STUD TO SOLE PLATE, END NAIL	(2) 16d	(3) 3" x 0.131"	(3) 3"-14 GA.
	STUD TO SOLE PLATE, TOE-NAIL	(4) 8d	(4) 3" x 0.131"	(3) 3"-14 GA.
9	DOUBLE STUDS, FACE NAIL	16d AT 24"	3" x 0.131" AT 8" O.C.	3"-14 GA. AT 8" O.C.
10	DOUBLED TOP PLATES, TYP. FACE NAIL	16d AT 16"	3" x 0.131" AT 12" O.C.	3"-14 GA. AT 12" O.C.
	DOUBLE TOP PLATES, LAP SPLICE	(8) 16d	(12) 3" x 0.131"	(12) 3"-14 GA.
11	BLOCKING BETWEEN JOISTS OR RAFTERS, TO TOP PLATE, TOE-NAIL	(3) 8d	(3) 3" x 0.131"	(3) 3"-14 GA.
12	RIM JOIST TO TOP PLATE, TOE-NAIL	8d AT 6"	3" x 0.131" AT 6" O.C.	3"-14 GA. AT 6" O.C.
13	TOP PLATES, LAPS AND INTERSECTIONS, FACE NAIL	(2) 16d	(3) 3" x 0.131"	(3) 3"-14 GA.
14	CONTINUOUS HEADER, TWO PIECES	16d AT 16" ALONG EDGE	N.A.	N.A.
15	CEILING JOIST TO PLATE, TOE-NAIL	(3) 8d	(5) 3" x 0.131"	(5) 3"-14 GA.
16	CONTINUOUS HEADER TO STUD, TOE-NAIL	(4) 8d	N.A.	N.A.
17	CEILING JOISTS: LAPS OVER PARTITIONS, FACE NAIL *(SEE C.B.C. TABLE 2308.7.3.1)* △1	(3) 16d MIN.	(4) 3" x 0.131"	(4) 3"-14 GA.
18	CEILING JOISTS TO PARALLEL RAFTERS, FACE NAIL *(SEE C.B.C. TABLE 2308.7.3.1)* △1	(3) 16d MIN.	(4) 3" x 0.131"	(4) 3"-14 GA.
19	RAFTER TO PLATE, TOE-NAIL *(SEE C.B.C. TABLE 2308.7.5)* △1	(3) 8d	(3) 3" x 0.131"	(3) 3"-14 GA.
20	1" DIAGONAL BRACE TO EACH STUD AND PLATE, FACE NAIL	(2) 8d	(2) 3" x 0.131"	(3) 3"-14 GA.
21	1" x 8" SHEATHING OR LESS TO EACH BEARING, FACE NAIL	(3) 8d	N.A.	N.A.
22	WIDER THAN 1" x 8" SHEATHING TO EACH BEARING, FACE NAIL	(3) 8d	N.A.	N.A.
23	BUILT-UP CORNER STUDS	16d AT 24"	3" x 0.131" AT 16" O.C.	3"-14 GA. AT 16" O.C.
24	BUILT-UP GIRDERS AND BEAMS, FACE NAIL TOP AND BTM STAGG. ON OPP. SIDE	20d AT 32"	3" x 0.131" AT 24" O.C.	3"-14 GA. AT 24" O.C.
	BUILT-UP GIRDERS AND BEAMS, FACE NAIL AT ENDS AND AT EACH SPLICE	(2) 20d	(3) 3" x 0.131"	(3) 3"-14 GA.
25	2" PLANK TO EACH BEARING	16d	N.A.	N.A.
26	COLLAR TIE TO RAFTER, FACE NAIL	(3) 10d	(4) 3" x 0.131"	(4) 3"-14 GA.
27	JACK RAFTER TO HIP, TOE-NAIL	(3) 10d	(4) 3" x 0.131"	(4) 3"-14 GA.
	JACK RAFTER TO HIP, FACE NAIL	(2) 16d	(3) 3" x 0.131"	(3) 3"-14 GA.
28	ROOF RAFTER TO 2x RIDGE BEAM, TOE-NAIL OR FACE-NAIL	(2) 16d	(3) 3" x 0.131"	(3) 3"-14 GA.
29	JOIST TO BAND JOIST, FACE NAIL	(3) 16d	(4) 3" x 0.131"	(4) 3"-14 GA.
30	LEDGER STRIP, FACE NAIL	(3) 16d	(4) 3" x 0.131"	(4) 3"-14 GA.
31	WOOD STRUCTURAL PANELS AND PARTICLE BOARD (NOTE 2): SUBFLOOR, ROOF + WALL SHEATHING TO FRAMING:			
	1/2" AND LESS	6d (NOTE 3, 7)	2.375" x 0.113" (NOTE 9)	1.75" x 16 GA. (NOTE 10)
	19/32" TO 3/4"	8d (NOTE 4) 6d (NOTE 5)	2.375" x 0.113" (NOTE 11)	2" x 16 GA. (NOTE 11)
	7/8" TO 1"	8d (NOTE 3)	N.A.	N.A.
	1-1/8" TO 1-1/4"	10d OR 8d (NOTE 4)	N.A.	N.A.
	SINGLE FLOOR (COMBINATION SUBFLOOR-UNDERLAYMENT TO FRAMING):			
	3/4" AND LESS	6d (NOTE 5)	N.A.	N.A.
	7/8" TO 1"	8d (NOTE 5)	N.A.	N.A.
	1-1/8" TO 1-1/4"	10d (NOTE 4) 8d (NOTE 5)	N.A.	N.A.
32	PANEL SIDING TO FRAMING (NOTE 2):			
	1/2" AND LESS	6d (NOTE 6)	N.A.	N.A.
	5/8"	8d (NOTE 6)	N.A.	N.A.

NOTES: FOR SI: 1 inch = 25.4 mm

1. COMMON OR BOX NAILS ARE PERMITTED TO BE USED EXCEPT WHERE OTHERWISE STATED.
2. NAILS SPACED AT 6" O.C. AT EDGES, 12" O.C. AT INTERMEDIATE SUPPORTS EXCEPT 6" O.C. AT ALL SUPPORTS WHERE SPANS ARE 4'-0" OR MORE. NAILING OF WOOD STRUCTURAL PANEL AND PARTICLEBOARD DIAPHRAGMS AND SHEAR-WALLS, REFER TO C.B.C. SECTION 2305. WALL SHEATHING NAILS ARE PERMITTED TO BE COMMON, BOX OR CASING.
3. COMMON OR DEFORMED SHANK (6d - 2" x 0.113"; 8d - 2.5" x 0.131"; 10d - 3" x 0.148")
4. COMMON (6d - 2" x 0.113"; 8d - 2.5" x 0.131"; 10d - 3" x 0.148"; 16d - 3.5" x 0.162")
5. DEFORMED SHANK (6d - 2" x 0.113"; 8d - 2.5" x 0.131"; 10d - 3" x 0.148")
6. CORROSION-RESISTANT SIDING (6d - 1.875" x 0.106"; 8d - 2.375" x 0.128") OR CASING (6d - 2" x 0.099"; 8d - 2.5" x 0.113") NAILS.
7. FOR ROOF SHEATHING APPLICATIONS, 8d NAILS (2.5" x 0.113") ARE THE MINIMUM REQUIRED FOR WOOD STRUCTURAL PANELS.
8 STAPLES SHALL HAVE A MINIMUM CROWN WIDTH OF 7/16".
9. FOR ROOF SHEATHING APPLICATIONS, FASTENERS SPACED 4" O.C. AT EDGES AND 8" O.C. AT INTERMEDIATE SUPPORTS.
10. FASTENERS SPACED 4" O.C. AT EDGES AND 8" O.C. AT INTERMEDIATE SUPPORTS FOR SUBFLOOR AND WALL SHEATHING AND 3" O.C. AT EDGES AND 6" O.C. AT INTERMEDIATE SUPPORTS FOR ROOF SHEATHING.
11. FASTENERS SPACED 4" O.C. AT EDGES AND 8" O.C. AT INTERMEDIATE SUPPORTS.

NAIL SCHEDULE

FASTENER PER PLAN	SHANK DIA.	HEAD DIA.	MIN. LENGTH
8d	0.131"	0.281"	2-1/2"
10d	0.148"	0.312"	3"
16d	0.148"	0.344"	3-1/4"
16d COMMON	0.162"	0.344"	3-1/2"
20d	0.192"	0.406"	4"

NOTES:

1. ALL NAILS IN MANUF. HARDWARE SHALL BE PER MANUFACTURERS SPECIFICATIONS AS NOTED TO ACHIEVE MAX HARDWARE VALUE.
2. FASTENERS, INCLUDING NUTS AND WASHERS, IN CONTACT WITH SODIUM BORATE SBX/DOT PRESERVATIVE-TREATED WOOD IN AN INT., DRY ENVIRONMENT SHALL BE PERMITTED.
3. FASTENERS IN CONTACT WITH PRESERVATIVE -TREATED TREATED WOOD USING ALKALINE COPPER QUAT (ACQ-C, ACQ-D, ACQ-D CARBONATE), COPPER AZOLE (CA-B & CA-C, MCA-C) OR EXPOSED TO WEATHER SHALL BE HOT DIPPED GALV. OR STAINLESS STEEL

ABBREVIATION LEGEND

@	AT	EXT.	EXTERIOR	OPNG	OPENING
A.B.	ANCHOR BOLT	FDN	FOUNDATION	O.S.B.	ORIENTED STRAND BOARD
ABV	ABOVE	F.F.	FINISH FLOOR	O.W.S.J.	OPEN WEB STEEL JOIST
ACI	AMERICAN CONCRETE INSTITUTE	FIN.	FINISH	O.W.J.G.	OPEN WEB JOIST GIRDER
		F.J.	FLOOR JOIST	P.A.	POST ABOVE
ADD'L	ADDITIONAL	FLG	FLANGE	P.A.F.	POWDER-ACTUATED FASTENER
A.F.F.	ABOVE FINISHED FLOOR	FLR	FLOOR		
AGGREG.	AGGREGATE	F.O.B.	FACE OF BLOCK	P.C.F.	POUNDS PER CUBIC FOOT
AISC	AMERICAN INSTITUTE OF STEEL CONSTRUCTION	F.N.	FACE NAIL	PEN.	PENETRATION
		F.O.C.	FACE OF CONCRETE	PERF.	PERFORATED
AITC	AMERICAN INSTITUTE OF TIMBER CONSTRUCTION	F.O.M.	FACE OF MASONRY	PERP.	PERPENDICULAR
		F.O.S.	FACE OF STUD	PL.	PLATE
ALT.	ALTERNATE	F.P.	FIREPLACE - OR - FULL PENETRATION	PLY.	PLYWOOD
ARCH.	ARCHITECT(URAL)			PLYWD	PLYWOOD
ASTM	AMERICAN SOCIETY FOR TESTING & MATERIALS	FRMD	FRAMED	PR	PAIR
		FRMG	FRAMING	P.S.F.	POUNDS PER SQUARE FOOT
B/	BOTTOM OF	F.S.	FAR SIDE	P.S.I.	POUNDS PER SQUARE INCH
B.C.	BOTTOM CHORD	FT	FOOT	P.S.L.	PARALLEL-STRAND LUMBER
BLDG	BUILDING	FTG	FOOTING	PST	POST
BLK	BLOCK	G & N	GLUE AND NAIL	PT	POINT
BLKG	BLOCKING	GA.	GAGE	P.T.	PRESSURE TREATED - OR - POST-TENSION
BLW	BELOW	GALV.	GALVANIZED		
BM	BEAM	G.B.	GRADE BEAM	R	RADIUS
B.N.	BOUNDARY NAILING	GEN.	GENERAL	RECM'D	RECOMMEND(ATION)
B.O.	BY OTHERS - OR - BOTTOM OF	GLB	GLUED-LAMINATED BEAM	REF.	REFERENCE
		GR.	GRADE	REINF.	REINFORCED - OR - REINFORCING - OR - REINFORCEMENT
B.O.C.	BOTTOM OF CONCRETE	G.T.	GIRDER TRUSS		
B.O.F.	BOTTOM OF FOOTING	GYP.	GYPSUM		
B.O.S.	BOTTOM OF STEEL	G.W.B.	GYPSUM WALL BOARD	REQD	REQUIRED
BRG	BEARING	HD	HOLDOWN	RET.	RETAINING
B.S.	BOTH SIDES	H.D.G.	HOT-DIP GALVANIZED	RETAIN.	RETAINING
BTM	BOTTOM	HDR	HEADER	R.J.	ROOF JOIST
BTWN	BETWEEN	HGR	HANGER	R.O.	ROUGH OPENING
CALCS	CALCULATIONS	H.H.N.	HEAVY HEX NUT	R.P.	"REAL POST"
CANT.	CANTILEVER	H.N.	HEX NUT	R.R.	ROOF RAFTER
C.B.	CEILING BEAM	HORIZ.	HORIZONTAL	R/S	RESAWN (ROUGH-SAWN)
C.B.C.	CALIFORNIA BUILDING CODE	H.S.B.	HIGH STRENGTH BOLT	R.T.	ROOF TRUSS
		HSS	STRUCTURAL TUBE	R.W.	RETAINING WALL
C.C.	CENTER TO CENTER	HT	HEIGHT	RWD	REDWOOD
C.C.J.	CRACK CONTROL JOINT	I.D.	INSIDE DIAMETER	S.A.D.	SEE ARCHITECTURAL DRAWINGS
C.F.	CUBIC FOOT	INFO.	INFORMATION		
C.J.	CONTROL JOINT - OR - CEILING JOIST	INT.	INTERIOR	S.B.	SOLID BLOCK
		INV.	INVERT(ED)	S.B.T.	SET-BACK TRUSS
℄	CENTERLINE	JNT	JOINT	SCHED.	SCHEDULE
CLG	CEILING	JST	JOIST	SEP.	SEPARATION
CLR	CLEAR	J.T.	JACK TRUSS	S.G.T.	SUB-GIRDER TRUSS
C.M.U.	CONCRETE MASONRY UNIT	K	KIPS	SHT	SHEET
COL.	COLUMN	K.D.	KILN-DRIED	SIM.	SIMILAR
COLL.	COLLECTOR	KLF	KIPS PER LINEAL FOOT	S.M.S.	SHEET METAL SCREW
CONC.	CONCRETE	K.P.	KING POST	S.J.	SOFFIT JOIST
COND.	CONDITION	lbs	POUNDS	SPEC.	SPECIFICATION
CONN.	CONNECTION	L.B.	LAG BOLT	SQ.	SQUARE
CONSTR.	CONSTRUCTION	L.F.	LINEAL FOOT	S.S.	SELECT STRUCTURAL
CONT.	CONTINUOUS	LONGIT.	LONGITUDINAL	S4S	SURFACED 4 SIDES
CONTR.	CONTRACTOR	LG	LONG	STAGG.	STAGGER - OR - STAGGERED
C.P.	COMPLETE PENETRATION WELD	L.L.	LIVE LOAD	STD	STANDARD
		LSL	LAMINATED STRAND LUMBER	STIFF.	STIFFENER
C.S.	COUNTERSUNK	LT	LIGHT	STL	STEEL
C.T.	COLLECTOR TRUSS	LTWT	LIGHTWEIGHT	STRUCT.	STRUCTURAL
CTR	CENTER	LVL	LAMINATED VENEER LUMBER	SW	SHEARWALL
CTRD	CENTERED	MATL	MATERIAL	SYMM.	SYMMETRICAL
C.Y.	CUBIC YARD	MAX.	MAXIMUM	T + B	TOP AND BOTTOM
DBL	DOUBLE	M.B.	MACHINE BOLT	T + G	TONGUE AND GROOVE
DET.	DETAIL	MECH.	MECHANICAL	T.C.	TOP CHORD
D.F.	DOUGLAS FIR	MEMB.	MEMBRANE	THK	THICK
DIA.	DIAMETER	MID.	MIDDLE	THKND	THICKENED
DIAG.	DIAGONAL	MIN.	MINIMUM	T.N.	TOE NAIL
DIM.	DIMENSION	M.I.W.	MALLEABLE IRON WASHER	T.O.B.	TOP OF BLOCK
D.L.	DEAD LOAD	M.O.	MASONRY OPENING	T.O.C.	TOP OF CONCRETE
D.J.	DECK JOIST	MOIST.	MOISTURE	T.O.P.	TOP OF PLATE
D.T.	DRAG TRUSS	MFR	MANUFACTURER	T.O.S.	TOP OF STEEL - OR - TOP OF SHEATHING
DP	DEEP	MFRD	MANUFACTURED		
DTL	DETAIL	MTL	METAL	T.O.W.	TOP OF WALL
DWG	DRAWING	(N)	NEW	T/	TOP OF
(E)	EXISTING	N.A.	NOT APPLICABLE	T.P.	TOP PLATE
EA.	EACH	N.B.	NON-BEARING	TRANSV.	TRANSVERSE
E.B.	EXPANSION BOLT	N.D.T.	NON-DESTRUCTIVE TESTING	TYP.	TYPICAL
E.F.	EACH FACE	N.I.C.	NOT IN CONTRACT	U.N.O.	UNLESS NOTED OTHERWISE
E.J.	EXPANSION JOINT	NLG	NAILING	VERT.	VERTICAL
EL.	ELEVATION	No.	NUMBER	V.I.F.	VERIFY IN FIELD
ELEV.	ELEVATOR	N.S.	NEAR SIDE	w/	WITH
EMB.	EMBEDMENT	N.S.G.	NON-SHRINK GROUT	WD	WOOD
EMBED.	EMBEDMENT	N.T.S.	NOT TO SCALE	W.P.	WORK POINT - OR - WATERPROOF(ING)
E.N.	EDGE NAIL	O/	OVER		
E.O.R.	ENGINEER OF RECORD	O.C.	ON CENTER	WT	WEIGHT
EQ.	EQUAL	O.D.	OUTSIDE DIAMETER	W.W.F.	WELDED WIRE FABRIC
EQUIP.	EQUIPMENT	O.F.O.S.	OUTSIDE FACE OF STUD	W.W.M.	WELDED WIRE MESH
E.S.	EACH SIDE	O.H.	OVERHANG - OR - OPPOSITE HAND	#	NUMBER (PREFIX)
E.W.	EACH WAY			#	POUNDS (SUFFIX)

PRE-CONSTRUCTION MEETING:

PRE-CONSTRUCTION MEETINGS WITH THE CONTRACTOR, BY OUR EXPERIENCE, HAVE SIGNIFICANTLY AIDED IN THE SUCCESS OF THE PROJECT. PRIOR TO BEGINNING CONSTRUCTION THE CONTRACTOR SHALL COORDINATE AND SCHEDULE A PRE-CONSTRUCTION MEETING FOR ALL MEMBERS OF THE PROJECT TEAM. AS A MINIMUM, THE GENERAL CONTRACTOR, THE FRAMER, THE FOUNDATION SUBCONTRACTOR, AND THE PROJECT ENGINEER SHALL ATTEND.

NOTE REGARDING STRUCTURAL DRAWINGS:

THE STRUCTURAL DRAWINGS SHOW ONLY THE BASIC STRUCTURAL FRAME. REFER TO ARCHITECTURAL, MECHANICAL AND ELECTRICAL DRAWINGS FOR NONSTRUCTURAL ITEMS INCLUDING NONSTRUCTURAL WALLS, WHICH REQUIRE SPECIAL PROVISIONS DURING CONSTRUCTION. ONLY OPENINGS REQUIRING SPECIAL FRAMING ARE SHOWN ON STRUCTURAL PLANS. SEE TYPICAL DETAILS FOR REINFORCING AROUND NOMINAL OPENINGS NOT SHOWN.

GRAVITY LOAD SCHEDULE

MATERIAL	DEAD LOAD	LIVE LOAD
ROOF	18.0 psf	20.0 psf
CEILING	7.0 psf	10.0 psf
FLOOR	5.0 psf	40.0 psf
DECK	14.0 psf	60.0 psf
EXT. WALL	17.0 psf	
INT. WALL	7.0 psf	

SOILS & FOUNDATION DESIGN DATA

SPREAD FOOTING FOUNDATION
- ALLOWABLE SOIL PRESSURE - 1000 PSF (DL + LL)
- MINIMUM FOOTING WIDTH - 12 INCHES
- MINIMUM FOOTING DEPTH - 18 INCHES

PIER & GRADE BEAM
- ALLOWABLE SKIN FRICTION - 250 PSF (DL + LL)
- MINIMUM PIER DIAMETER - 16 INCHES
- MINIMUM PIER DEPTH - 12 FEET
- NEGLECT - 2 FEET

STRUCTURAL DESIGN INFORMATION

BASIS OF STRUCTURAL DESIGN: 2022 CALIFORNIA BUILDING CODE

LATERAL SYSTEM DESIGN DATA

GENERAL DESIGN DATA:
- IMPORTANCE FACTOR - 1
- OCCUPANCY CATEGORY - II
- ANALYSIS PROCEDURE USED - EQUIVALENT LATERAL FORCE
- LATERAL FORCE RESISTING SYSTEM - WOOD SHEAR WALLS

WIND DESIGN DATA:
- 3 SECOND GUST SPEED - 110 mph
- WIND EXPOSURE RATING - Exp. C

SEISMIC DESIGN DATA:
- SOIL SITE CLASS - D
- SEISMIC DESIGN CATEGORY - E
- SEISMIC BASE SHEAR - 10.401 kips
- SEISMIC RESPONSE COEFFICIENT, C_s - 0.308
- RESPONSE MODIFICATION FACTOR, R - 6.5
- MAPPED SPECTRAL RESPONSE ACCELERATION, S_s - 2.50
- MAPPED SPECTRAL RESPONSE ACCELERATION, S_1 - 1.20
- SPECTRAL RESPONSE COEFFICIENTS, S_{DS} - 2.00
- SPECTRAL RESPONSE COEFFICIENTS, S_{D1} - 1.36

SYMBOLS LEGEND

NOT ALL SYMBOLS USED IN THE DRAWING ARE LISTED BELOW. REFER TO AMERICAN WELDING SOCIETY PUBLICATIONS FOR WELDING SYMBOLS.

- (LENGTH) SW-# — INDICATES SHEARWALL NUMBER AND MINIMUM DESIGN LENGTH. SHEARWALLS SHALL BE AS NOTED IN THE SHEARWALL SCHEDULE 103/SD1
- HD — INDICATES HOLDOWN TYPE AS MANUFACTURED BY THE "SIMPSON STRONGTIE COMPANY." HOLDOWNS SHALL BE AS NOTED IN THE HOLDOWN SCHEDULE, PER 112/SD1
- INDICATES INTERIOR BEARING WALL BELOW
- INDICATES HEADER PER HEADER SCHEDULE 210/SD2
- INDICATES WALL BELOW (NON-BEARING AT INTERIOR CONDITION)
- INDICATES WALL ABOVE
- INDICATES BALLOON FRAMED WALL. REFER TO NOTE 6. UNDER GENERAL FRAMING NOTES FOR STUD SIZE AND SPACING REQUIREMENTS, U.N.O.
- P.A. — INDICATES POST BELOW
- INDICATES POST ABOVE
- # DETAIL NUMBER
- # SHEET NUMBER
- INDICATES ELEVATION
- # — REFERENCE TO STRUCTURAL CALCULATIONS FOR THE BENEFIT OF THE BUILDING OFFICIAL
- △# — INDICATES REVISION NUMBER AND PLAN REVISIONS INSIDE CLOUD
- E — REFERENCE TO STRUCTURAL CALCULATIONS FOR THE BENEFIT OF THE BUILDING OFFICIAL
- INDICATES HANGER.

ADVANCED ENGINEERING
3381 Walnut Blvd. Ste. 220
Brentwood, CA 94513
Office: 925.516.3502
Fax: 925.262.4662

THE DRAWINGS AND SPECIFICATIONS APPEARING HEREIN CONSTITUTE THE ORIGINAL WORK OF **DP ADVANCED ENGINEERING, INC.** AND SHALL BE CONSIDERED CONFIDENTIAL AND PROPRIETARY PROPERTY. COPYING OR REPRODUCING ANY PORTION OF THESE DOCUMENTS WITHOUT WRITTEN AUTHORIZATION IS STRICTLY PROHIBITED. THE CONTRACT DOCUMENTS WERE PREPARED FOR USE ON THIS SPECIFIC SITE IN CONJUNCTION WITH ITS ISSUE DATE AND ARE NOT SUITABLE FOR USE ON A DIFFERENT SITE OR AT A LATER TIME. USE OF THESE DRAWINGS FOR REFERENCE OR EXAMPLE ON ANOTHER PROJECT REQUIRES THE SERVICES OF A PROPERLY LICENSED ENGINEER. REPRODUCTION OF THE CONTRACT DOCUMENTS FOR REUSE ON ANOTHER PROJECT IS NOT AUTHORIZED.

TOWN OF DANVILLE
ACCESSORY DWELLING UNIT
MEDITERRANEAN
DANVILLE, CALIFORNIA

△1
△2
△3
△4
△5
△6

PLEASE NOTE THE REVISION NUMBER AND DATE ARE FOR STRUCTURAL SHEETS ONLY.

Engineering Seal:

Sheet Description: GENERAL NOTES AND DESIGN CRITERIA

No Scale

Initial Issue Date: March 24, 2023
Drawn By: E. Bennett
Project Designer: J. Peek
Project Manager: J. Peek Ext. 23
Job No. W021420
Sheet No. SN1

DO NOT SCALE THESE DRAWINGS
PLAN SET ID: S-ME-R-P

TOWN OF DANVILLE USE ONLY

GENERAL FRAMING NOTES

1. NO STRUCTURAL MEMBER SHALL BE CUT OR NOTCHED UNLESS SPECIFICALLY SHOWN, NOTED, OR APPROVED BY THE ENGINEER. NOTCH DETAILS, IF PROVIDED, ARE FOR GENERAL GUIDANCE ONLY. THE ENGINEER SHALL BE CONTACTED TO APPROVE LOCATIONS OF PROPOSED NOTCHES. STUDS IN EXTERIOR WALLS AND BEARING PARTITIONS MAY BE CUT OR NOTCHED TO A DEPTH NOT EXCEEDING 25% OF STUD WIDTH. CUTTING OR NOTCHING OF STUDS IN NON-BEARING PARTITIONS SHALL NOT EXCEED 40% OF THE WIDTH. SEE DETAIL 404/SD4 FOR MORE INFORMATION.

2. **TYPICAL FRAMING AND STRUCTURAL MATERIALS:**
ALL FRAMING LUMBER SHALL BE DOUGLAS FIR, AND SHALL BE STAMPED WITH A GRADE MARK WITH THE FOLLOWING GRADES. FRAMING LUMBER SHALL CONFORM TO GRADING RULES OF WWPA AND COMPLIES WITH DOC PS 20.
MAXIMUM MOISTURE CONTENT SHALL NOT EXCEED 19% AT THE TIME OF CONSTRUCTION.

FRAMING MATERIAL	GRADE
TYPICAL WALL STUDS	PER NOTE 6 BELOW
SOLE PLATES (2x MIN.) 1.	STUD GRADE, MINIMUM
MUDSILLS (2x MIN.) 2.	P.T. DF. STD & BETTER
TOP PLATES (2x MIN.)	D.F. #2, MIN. U.N.O.
RIM JOIST (2x DIMENSIONAL)	D.F. #2, MIN. U.N.O.
FLR JOISTS (2x DIMENSIONAL)	D.F. #2, MIN. U.N.O.

FRAMING MATERIAL	GRADE
RAFTERS (2x DIMENSIONAL)	D.F. #2, MIN. U.N.O.
BUILT UP HEADERS (2-2x)	D.F. #2, MIN. U.N.O.
4x POSTS/BEAMS/RAFTERS	D.F. #2, MIN. U.N.O.
6x POSTS/BEAMS/RAFTERS	D.F. #1, MIN. U.N.O.
STRUCTURAL PLYWOOD	APA RATED SHTG
LUMBER EXPOSED TO WEATHER 3.	P.T. D.F. #2 U.N.O.

1. SOLE PLATES, AS NOTED ABOVE, ARE ALL INTERIOR SILL PLATES NOT IN CONTACT WITH CONCRETE. MATERIAL SHALL BE UC1 INTERIOR/DRY CATEGORY AS DEFINED BY AWPA STANDARD U1.
2. MUDSILLS, AS NOTED ABOVE, ARE ALL INTERIOR SILL PLATES IN DIRECT CONTACT WITH CONCRETE. MATERIAL SHALL BE UC2 INTERIOR/DAMP CATEGORY AS DEFINED BY AWPA STANDARD U1.
3. LUMBER EXPOSED TO WEATHER, AS NOTED ABOVE, IS ALL EXTERIOR LUMBER ABOVE GROUND AND EXPOSED TO WEATHER. MATERIAL SHALL BE UC3B ABOVE GROUND EXPOSED CATEGORY AS DEFINED BY AWPA STANDARD U1.

3. **PRESERVATIVE TREATED OR NATURALLY DURABLE MATERIALS:**
LUMBER SHALL BE TREATED WITH TYPICAL WATERBORNE PRESERVATIVES: ALKALINE COPPER QUAT (ACQ-C, ACQ-D, ACQ-D CARBONATE), COPPER AZOLE (CA-B & CA-C, MCA-C) AND SODIUM BORATES (SBX/DOT). THESE TREATMENTS ARE OFTEN REFERRED TO BY TRADE NAMES SUCH AS: WOLMANIZED NATURAL SELECT™ (COPPER AZOLE), PRESERVE AND NATUREWOOD® (ACQ), MICROPRO™, SMART SENSE™ (MCQ), AND ADVANCE GUARD® (BORATE).

A. ALL INTERIOR/DAMP CONSTRUCTION, UC2 CATEGORY, SHALL BE TREATED WITH SODIUM BORATE SBX/DOT.
   1. PLAIN CARBON STEEL FASTENERS, INCLUDING NUTS AND WASHERS, IN CONTACT WITH SODIUM BORATE SBX/DOT PRESERVATIVE-TREATED WOOD IN AN INTERIOR, DRY ENVIRONMENT SHALL BE PERMITTED.

B. ALL EXTERIOR ABOVE GROUND CONSTRUCTION (INCL. DECK FRAMING), UC3B CATEGORY, SHALL BE TREATED WITH ALKALINE COPPER QUAT (ACQ-C, ACQ-D, ACQ-D CARBONATE), OR COPPER AZOLE (CA-B & CA-C, MCA-C)
   1. ALL FASTENERS AND CONNECTORS IN CONTACT WITH PRESERVATIVE-TREATED TREATED WOOD USING ALKALINE COPPER QUAT (ACQ-C, ACQ-D, ACQ-D CARBONATE), OR COPPER AZOLE (CA-B & CA-C, MCA-C) SHALL BE HOT DIPPED GALVANIZED OR STAINLESS STEEL IN ACCORDANCE WITH GOVERNING CBC SEC. 2304.10 AND SHALL BE IN ACCORDANCE WITH ASTM A 153.

C. WOOD JOISTS OR WOOD STRUCTURAL FLOORS THAT ARE CLOSER THAN 18 INCHES OR WOOD GIRDERS THAT ARE CLOSER THAN 12 INCHES TO EXPOSED GROUND IN CRAWL SPACES OR UNEXCAVATED AREAS LOCATED WITHIN THE PERIMETER OF THE BUILDING FOUNDATION SHALL BE PRESERVATIVE-TREATED WOOD IN ACCORDANCE CBC.

4. **GLUE-LAMINATED STRUCTURAL MATERIALS:**
STANDARD SPECIFICATIONS FOR GLUE-LAMINATED STRUCTURAL MEMBERS, ANSI/AITC A 190.1 AND ASTM D3737. GLUE-LAMINATED BEAMS SHALL BE INSPECTED AND A CERTIFICATE PROVIDED TO THE FILED INSPECTOR AT THE TIME OF FRAMING INSPECTION. FABRICATION SHALL BE PERFORMED IN ACCORDANCE WITH CBC 1705.5. ALL GLUE-LAMINATED BEAMS THAT ARE CONTINUOUS OVER SUPPORTS OR CANTILEVERED SHALL HAVE TENSION LAMINATIONS ON TOP OF BEAMS.
MAXIMUM MOISTURE CONTENT SHALL NOT EXCEED 16% AT THE TIME OF CONSTRUCTION.

A. GLULAM MEMBERS IN DRY SERVICE USE SHALL BE DOUGLAS-FIR 24F-V4 (SINGLE SPAN) OR COMBINATION 24F-V8 (MULTI-SPAN & CANTILEVER) U.N.O. BEAMS SHALL BE ARCHITECTURAL GRADE WHEN EXPOSED TO VIEW, S.A.D.
   1. GLULAM MEMBERS, SEE PLAN SPECIFICATIONS FOR CAMBER WHERE OCCURS.

MATERIAL GRADE	E ($x10^6$ psi)	Fb (psi)	Fv (psi)	Fc (psi)	RADIUS, U.N.O.
DF/DF 24F-V4	1.8	2400	265	650	3500' RADIUS
DF/DF 24F-V8	1.8	2400	265	650	NO CAMBER

B. GLULAM MEMBERS IN WET SERVICE USE SHALL BE ALASKAN CEDAR 20F-V12 (SINGLE SPAN) OR COMBINATION 20F-V13 (MULTI-SPAN & CANTILEVER) U.N.O.
   1. GLULAM MEMBERS, SEE PLAN SPECIFICATIONS FOR CAMBER WHERE OCCURS.

MATERIAL GRADE	E ($x10^6$ psi)	Fb (psi)	Fv (psi)	Fc (psi)	RADIUS, U.N.O.
AC/AC 20F-V12	1.5	2000	265	560	3500' RADIUS
AC/AC 20F-V13	1.5	2000	265	560	NO CAMBER

C. DESIGN, FABRICATION AND CONSTRUCTION OF STRUCTURAL GLULAM MEMBERS SHALL CONFORM TO THE AMERICAN INSTITUTE OF TIMBER CONSTRUCTION STANDARD, MANUAL No. 301 AND THE COMMERCIAL STANDARD FOR STRUCTURAL GLUED LAMINATED TIMBER, CS 253.

D. STRUCTURAL PLYWOOD SHALL BE GRADED PER APA PSI-83AND SHALL BE INTERIOR TYPE SHEATHING C-D GRADE WITH EXTERIOR GLUE. EQUIVALENT O.S.B. WOOD STRUCTURAL PANEL MAY BE USED AS AN ALTERNATE TO PLYWOOD. HOWEVER, IN ACCORDANCE WITH THE TILE COUNCIL OF AMERICA RECOMMENDATIONS, O.S.B. SHALL NOT BE USED BELOW TILE MORTAR. ALL HORIZONTAL PLYWOOD SHALL BE LAID WITH FACE GRAIN PERPENDICULAR TO FRAMING MEMBERS, WITH STAGGERED JOINTS.

5. **STRUCTURAL COMPOSITE LUMBER (SCL) MATERIALS:**
ALL STRUCTURAL COMPOSITE LUMBER (SCL) SHALL BE MANUFACTURED PER ASTM D5055 AND ASTM D5456. STRUCTURAL COMPOSITE LUMBER SHALL BE MANUFACTURED BY BOISE CASCADE, OR EQUAL. ALTERNATE MANUFACTURERS ARE PERMITTED AND CONSIDERED AN EQUIVALENT SUBSTITUTION IF THE SUBSTITUTED MATERIAL MEETS, OR EXCEEDS, ALL THE DESIGN PROPERTIES LISTED BELOW.

SPECIFICATION	MATERIAL	WIDTH (in.) 2.	E ($x10^6$ psi)	Fb (psi)	Fv (psi)	$Fc_{\perp}$ (psi)	$Fc_{\parallel}$ (psi)
RIM JOIST	VERSA-STRAND LVL	1-5/16	1.4	1800	225	525	2500
LVL COLUMN	VERSA-LAM LVL	3.5, 5.25, 7	1.7	2650	285	750	3000
LVL STUD	VERSA-STUD LVL	1.5	1.7	2617	285	450	3000
LVL BEAM	VERSA-LAM 2.0E	1.75	2.0	2800	285	750	3000
LVL BEAM	VERSA-LAM 2.0E	3.5, 5.25, 7	2.0	3100	285	750	3000

1. BEAM DEPTH IS ASSUMED TO MATCH FLOOR FRAMING DEPTH U.N.O.
2. MFR BEAM MEMBERS MAY BE BUILT UP TO ACHIEVE SPECIFIED WIDTHS PER DETAIL 609/SD6 U.N.O. ON PLANS.

6. ALL STUD WALLS SHOWN ON STRUCTURAL DRAWINGS SHALL BE FRAMED AS FOLLOWS (U.O.N.):

EXTERIOR WALL STUD HEIGHT TABLE (L/360 DEFL.)

MAX. PLATE HT	STUD TYPE	SPACING
21'-5"	(2) 2x6 DOUG-FIR #1	12" O.C.
19'-5"	(2)-2x6 DOUG-FIR #1	16" O.C.
15'-1"	2x6 DOUG-FIR #2	16" O.C.
12'-1"	(2)-2x4 DOUG-FIR #1	16" O.C.
	2x6 STUD GRADE	16" O.C.
10'-1"	2x4 DOUG-FIR #1	16" O.C.
	2x6 STUD GRADE	16" O.C.
9'-1"	2x4 DOUG-FIR #2	16" O.C.
	2x6 STUD GRADE	16" O.C.
8'-1"	2x4 STUD GRADE	16" O.C.
	2x6 STUD GRADE	16" O.C.

INTERIOR WALL STUD HEIGHT TABLE (L/240 DEFL.)

MAX. PLATE HT	STUD TYPE	SPACING
21'-5"	2x6 STUD GRADE	12" O.C.
19'-5"	2x6 STUD GRADE	16" O.C.
15'-1"	2x6 STUD GRADE	16" O.C.
12'-1"	2x4 STUD GRADE	16" O.C.
	2x6 STUD GRADE	16" O.C.

NOTE:
A. STUD HEIGHTS EXCEEDING 10'-1" SHALL BE BRACED MID-HEIGHT USING FULL DEPTH 2x BLOCKING.

7. TOP PLATES SHALL BE DOUBLED ON ALL STUD WALLS. LAP 4'-0" MINIMUM AT TOP PLATE SPLICES, WITH (12) 16d NAILS EACH SIDE OF SPLICE, U.N.O. SPLICES IN UPPER AND LOWER PLATES SHALL BE STAGGERED 4'-0" MINIMUM.

8. POSTS IN WALLS MAY BE MADE WITH MULTIPLE STUDS OF EQUIVALENT WIDTH AND DEPTH, U.O.N. SECURE MULTIPLE STUDS WITH 16d NAILS AT 8" O.C. STAGGERED.

9. PROVIDE KING STUDS AT THE ENDS OF ALL HEADERS OR OTHER BEAMS INSTALLED IN WALLS, SEE DETAIL 401/SD4 ADJACENT, STACKING WINDOWS SHALL BE SEPARATED BY KING STUDS THAT ARE CONTINUOUS FROM SILL TO TOP PLATE, CRIPPLE STUDS UNDER HEADERS SHALL BE CONTINUOUS TO SILL PLATE. END NAIL KING STUDS TO HEADERS.

10. ALL MEMBERS IN BEARING SHALL BE ACCURATELY CUT AND ALIGNED SO THAT FULL BEARING IS PROVIDED WITHOUT THE USE OF SHIMS.

11. BLOCK ALL STUD WALLS AS REQUIRED FOR SHEATHING AND FINISHES. BALLOON FRAME ALL WALLS WITH SLOPING CEILING OR WITH RAISED CEILINGS.

12. INSTALL HORIZONTAL MEMBERS WITH CROWN UP. WHERE KNOTS EXIST NEAR THE TOP OR BOTTOM OF HORIZONTAL MEMBERS, INSTALL MEMBER WITH KNOTS UP. CANTILEVERED DECK JOISTS SHALL BE CAREFULLY NOTCHED AND TRIMMED (IF NECESSARY) TO PROVIDE SLOPE WITHOUT OVER-CUTTING.

13. PROVIDE FULL DEPTH BLOCKING OR CONTINUOUS RIM JOIST AT ALL FLOOR AND ROOF FRAMING SUPPORTS. FRAMING MEMBERS SHALL HAVE A MINIMUM OF 2" BEARING AT SUPPORTS. LAPPING JOISTS SHALL HAVE 6" MINIMUM OVERLAP CENTERED OVER INTERIOR SUPPORTS.

14. ALL BOLTED WOOD CONNECTIONS SHALL HAVE A WASHER UNLESS A STEEL PLATE IS SPECIFIED. HOLES SHALL BE PROPERLY ALIGNED. OVERSIZED HOLES ARE NOT ALLOWED. NUTS SHALL BE SNUG TIGHTENED. BOLT HOLES SHALL BE NOMINAL DIAMETER OF BOLT PLUS 1/16".

15. NAILED WOOD CONNECTIONS SHALL USE COMMON WIRE NAILS, U.N.O. MIN. NAILING REQUIREMENTS FOR STANDARD CONNECTIONS SHALL BE IN ACCORDANCE WITH THE GOVERNING C.B.C. FASTENING SCHEDULE (TABLE 2304.10.1).

16. ALL MANUFACTURED CONNECTION HARDWARE SHALL BE AS DESIGNATED ON DRAWINGS AND INSTALLED (WITH ALL NAIL HOLES FILLED) IN ACCORDANCE WITH MANUFACTURER'S INSTRUCTIONS AND APPLICABLE ICC APPROVALS.

17. INSTALL LAG SCREWS IN DRILLED LEAD HOLES WITH A DIA. EQUAL TO 3/4" OF THE SHANK DIAMETER. LAG SCREWS SHALL NOT BE HAMMERED IN. PROVIDE WASHERS UNDER HEADS BEARING ON WOOD. HOLES SHALL BE PROPERLY ALIGNED.

CONCRETE NOTES

CONCRETE WORK SHALL CONFORM TO THE REQUIREMENTS OF THE 2022 BUILDING CODE (C.B.C.) AND THE LATEST EDITION OF THE ACI318-14, UNLESS NOTED OTHERWISE.

1. CONCRETE REQUIREMENTS: BASED ON NORMAL WEIGHT CONCRETE (UNIT WEIGHT OF 145 TO 150 pcf).

	MINIMUM COMPRESSIVE STRENGTH (psi) (AT 28 DAYS)	SLUMP (+/- 1/2")	AGGREG. SIZE	SPEC. INSP. REQD	MAXIMUM WATER TO CEMENT RATIO (NOTE 1F)	CEMENT TYPE ASTM C150
GRADE BEAMS & STEM WALLS	3000	4"	3/4"	NO **	.55	II OR V
CONCRETE PIERS	3000	4"	3/4"	NO **	.55	II OR V
FOOTINGS ON GRADE	3000	4"	1"	NO **	.55	II OR V
FLOOR SLABS ON GRADE	3000	4"	1"	NO **	.45	II OR V

** **SPECIAL INSPECTION IS NOT REQUIRED, DESIGN COMPRESSIVE STRENGTH IS 2500 psi, HIGHER STRENGTHS HAVE BEEN SPECIFIED FOR QUALITY CONTROL.**

A. COARSE AGGREGATE SHALL BE HARD, DURABLE CRUSHED STONE OR GRAVEL GRADED PER ASTM C33. MAXIMUM SIZE OF AGGREGATE SHALL BE AS NOTED IN SCHEDULE ABOVE AND DEFINED BELOW. SAND SHALL BE CLEAN, HARD, DURABLE, WASHED FREE FROM SILT, LOAM OR CLAY.
   1. GRADE BEAMS, STEM WALLS, RETAINING WALLS AND OTHER CONCRETE FRAMEWORK LESS THAN 10" WIDE SHALL USE 3/4" AGGREGATE CONFORMING TO ASTM C33 WITH 100% PASSING 1" SIEVE AND 90% (MINIMUM) PASSING 3/4" SIEVE. TO ENSURE PROPER CONCRETE COVER AND CONSOLIDATION.
   2. FOOTING AND SLABS ON GRADE, INCLUDING POST-TENSION AND MAT SLABS, SHALL USE 1" AGGREGATE CONFORMING TO ASTM C33 WITH 95% (MINIMUM) PASSING 1" SIEVE.

B. MIXING WATER SHALL BE CLEAN AND FREE FROM INJURIOUS AMOUNTS OF OIL, ACIDS, ALKALIES, ORGANIC MATERIALS OR OTHER DELETERIOUS SUBSTANCES.
C. CONCRETE EXPOSED TO SULFATE SHALL USE TYPE V CEMENT WITH POZZOLAN.
D. FLY ASH OR POZZOLANS, IF USED, SHALL CONFORM WITH ASTM C618, COAL FLY ASH AND RAW OR CALCINED NATURAL POLZZLAN FOR USE AS A MINERAL ADMIXTURE IN CONCRETE. USAGE SHALL NOT EXCEED 25 PERCENT, BY WEIGHT OF THE TOTAL CEMENTITOUS MATERIALS. WHEN POZZOLANS ARE USED TO MITIGATE THE EFFECT OF SULFATE CONTAINING SOILS THEY SHALL BE OF A TYPE THAT HAS DEMONSTRATED SUCH ABILITY BY TEST OR SERVICE RECORD.
E. ADMIXTURES CONTAINING CALCIUM CHLORIDE SHALL NOT BE USED.
F. CEMENT SHALL CONFORM WITH ASTM C150 & C 595, PORTLAND CEMENT AND BLENDED HYDRAULIC CEMENTS
G. TRANSIT MIX SHALL BE PER ASTM C-94.
H. MIX DESIGN SHALL MEET THE RECOMMENDED SPECIFICATION UNLESS AN ALTERNATE MIX IS SUBMITTED AND REVIEWED BY THE ENGINEER.

2. SPECIAL INSPECTION OF CONCRETE WORK IS REQD WHERE NOTED ABOVE. WHEN REQD, SPECIAL INSPECTION SHALL INCLUDE THE INSPECTION OF THE PLACEMENT OF REINFORCEMENT, AND THE INSPECTION OF THE CONCRETE PLACEMENT OPERATIONS AS WELL AS CONCRETE CYLINDER TESTS, PER C.B.C. SECTION 1705.3. THE FOLLOWING THREE CRITERIA ESTABLISH THE REQD MINIMUM SAMPLING FREQUENCY FOR EACH CLASS OF CONCRETE:
   A. ONE EACH DAY A GIVEN CLASS IS PLACED, NOR LESS THAN
   B. ONCE FOR EACH 150 yd OF EACH CLASS PLACED EACH DAY, NOR LESS THAN
   C. ONCE FOR EACH 5000 ft OF SLAB OR WALL SURFACE AREA PLACED EACH DAY.

3. SPLICES OF CONTINUOUS REINFORCEMENT SHALL HAVE A MINIMUM LAP PER DETAILS 202/SD2 AND 203/SD2 UNLESS NOTED OTHERWISE. ALL REINFORCING STEEL SHALL BE SECURELY WIRED AND PROPERLY SUPPORTED ABOVE GROUND, AND AWAY FROM FORMS. REINFORCING BAR FABRICATION, LAPS AND PLACEMENT SHALL CONFORM TO THE MANUAL OF STANDARD PRACTICE OF THE CONCRETE REINFORCING STEEL INSTITUTE.

4. REINFORCING SHALL BE NEW STOCK, DEFORMED BARS, CONFORMING TO ASTM A-615 AS FOLLOWS (U.N.O.) : NO. 3 AND SMALLER: GRADE 40; NO. 4 AND LARGER: GRADE 60
   A. ALL BARS TO BE WELDED SHALL MEET THE REQUIREMENTS OF ASTM A706, GRADE 60.
   B. WELDED WIRE FABRIC SHALL CONFORM TO ASTM A-185, FLAT SHEETS ONLY. LAP FABRIC 6" MINIMUM.
   C. REINFORCEMENT PLACEMENT SHALL CONFORM TO DETAIL A/SD3
   D. ANCHOR BOLTS SHALL BE ASTM A307, U.N.O. AND SHALL CONFORM TO DETAIL 201/SD2

5. REINFORCEMENT COVER: ALL DIMENSIONS SHOWING THE LOCATIONS OF REINFORCEMENT STEEL NOT NOTED AS "CLEAR", ARE TO THE CENTER OF THE STEEL. MINIMUM CLEAR COVERAGE OF REINFORCEMENT SHALL BE AS FOLLOWS:
   A. CONCRETE CAST AGAINST EARTH,
      EXCEPT SLABS ON GRADE: 3"
      SLABS ON GRADE: 1-1/2" U.N.O.
   B. CONCRETE CAST IN FORMS, BUT EXPOSED TO EARTH OR WEATHER:
      No. 5 REINFORCING AND SMALLER: 1-1/2"
      No. 6 REINFORCING AND LARGER: 2"
   C. CONCRETE NOT EXPOSED TO WEATHER OR IN CONTACT WITH THE GROUND:
      SLABS, WALLS AND JOISTS: 3/4"
      BEAMS AND COLUMNS: 1-1/2"

6. UNFORMED CONCRETE SURFACE CURING:
   A. CURE FOR ONE TO SEVEN DAYS BY MAINTAINING TEMPERATURE ABOVE 50 DEGREES FAHRENHEIT, AND IN A MOIST CONDITION.
   B. APPLY MEMBRANE-FORMING CURING COMPOUND TO DAMP CONCRETE IMMEDIATELY AFTER COMPLETION OF THE MOIST-CURING PERIOD.

7. THE CONTRACTOR SHALL INFORM THE ENGINEER AT LEAST TWO DAYS PRIOR TO POURING ANY STRUCTURAL CONCRETE SO THAT OBSERVATION OF THE WORK MAY BE PERFORMED AS REQUIRED BY THE ENGINEER'S CONTRACT OR THE CODE.

8. FOOTING/GRADE BEAM CONSTRUCTION JOINTS SHALL CONFORM TO DETAIL 204/SD2

9. CRACK CONTROL JOINTS SHALL BE PLACED IN CONCRETE SLABS ON GRADE AT A SPACING OF 12'-0" MAX. O.C. EACH WAY (U.N.O. ON PLAN) PER DETAIL 205A/SD2 LOCATION OF SLAB ON GRADE CONSTRUCTION JOINTS SHALL BE APPROVED BY THE ENGINEER PRIOR TO CONSTRUCTION. SLAB ON GRADE CONSTRUCTION JOINTS SHALL CONFORM TO 205B/SD2

10. ALL PIPES AND DUCTS THROUGH CONCRETE SHALL BE SLEEVED. VERIFY OPENINGS WITH PLUMBER AND ELECTRICIAN. SEE DETAIL 206/SD2

11. IF SPECIFIED, WELDED WIRE FABRIC SHALL BE 6x6-W1.4xW1.4. WIRE FABRIC SHALL BE ELECTRICALLY WELDED STEEL PER ASTM A185. LAP 6" MINIMUM AT ALL EDGES AND TIE AT THREE PLACES TO REINFORCING DOWELS (WHERE OCCUR) EXCEPT LOCATIONS WHERE SLAB IS INDEPENDENT OF FOUNDATION. CONTRACTOR SHALL PROVIDE SUPPORT CHAIRS TO ENSURE FABRIC IS LOCATED IN THE CENTER OF THE SLAB.

12. WELDING OF REINFORCING BARS SHALL CONFORM TO AWS D1.4 USING ASTM A706 REINFORCING BAR SPECIFICATIONS.

STRUCTURAL STEEL NOTES

1. THE FOLLOWING SECTION APPLIES TO ALL STRUCTURAL STEEL 1/8" THICK OR LARGER.
2. ALL WORK SHALL BE IN ACCORDANCE WITH THE CBC CHAPTER 22, AISC 15th EDITION, AND THE 2015 A.W.S. D1.1.
3. STEEL MATERIALS SHALL CONFORM TO THE FOLLOWING:
   A. PLATES AND SHAPES, U.N.O. — ASTM A992 (fy = 50 ksi), OR ASTM A572, GRADE 50
   B. STRUCTURAL TUBE COLUMNS AND BEAMS: — ASTM A500, GRADE B.
   C. PIPE COLUMNS: — ASTM A53, TYPE E OR S, GRADE B
   D. ROD — ASTM A36 (fy = 36 ksi)
4. FASTENERS SHALL CONFORM TO THE FOLLOWING:
   A. ANCHOR BOLTS: — ASTM A307, U.N.O.
   B. STEEL TO WOOD CONNECTIONS: — ASTM A307, U.N.O. USE CUT WASHERS (IF CONCEALED) AND MALLEABLE IRON WASHERS (IF EXPOSED)
5. WELDING ELECTRODES SHALL CONFORM TO 2015 A.W.S. D1.1 AND SHALL BE LOW HYDROGEN MATCHING FILLER METAL.
6. SURFACES OF STEEL TO BE FIELD WELDED SHALL BE FREE AND CLEAR OF ALL PAINT, DIRT, GREASE, OR OTHER DELETERIOUS COATINGS.
7. STEEL FRAMING, EXCEPT THOSE PORTIONS TO BE EMBEDDED IN CONCRETE, CONCEALED IN FRAMING, FIELD WELDED, OR HIGH STRENGTH BOLTED SHALL BE SHOP-PAINTED PER THE SPECIFICATIONS.
8. FIELD PAINT ALL EXPOSED STEEL SURFACES AFTER INSTALLATION, PER THE SPECIFICATIONS.
9. ALL WELDERS SHALL BE QUALIFIED BY A.W.S. PROCEDURES FOR THE REQUIRED WELDING.
10. SUBMIT CERTIFICATION OF COMPLIANCE FOR ALL STEEL MATERIALS.

TOWN OF DANVILLE USE ONLY

ADVANCED ENGINEERING
3381 Walnut Blvd. Ste. 220
Brentwood, CA 94513
Office: 925.516.3502
Fax: 925.262.4662

THE DRAWINGS AND SPECIFICATIONS APPEARING HEREIN CONSTITUTE THE ORIGINAL WORK OF **DP ADVANCED ENGINEERING, INC.** AND SHALL BE CONSIDERED CONFIDENTIAL AND PROPRIETARY PROPERTY. COPYING OR REPRODUCING ANY PORTION OF THESE DOCUMENTS WITHOUT WRITTEN AUTHORIZATION IS STRICTLY PROHIBITED. THE CONTRACT DOCUMENTS WERE PREPARED FOR USE ON THIS SPECIFIC SITE IN CONJUNCTION WITH ITS ISSUE DATE AND ARE NOT SUITABLE FOR USE ON A DIFFERENT SITE OR AT A LATER TIME. USE OF THESE DRAWINGS FOR REFERENCE OR EXAMPLE ON ANOTHER PROJECT REQUIRES THE SERVICES OF A PROPERLY LICENSED ENGINEER. REPRODUCTION OF THE CONTRACT DOCUMENTS FOR REUSE ON ANOTHER PROJECT IS NOT AUTHORIZED.

TOWN OF DANVILLE
ACCESSORY DWELLING UNIT
MEDITERRANEAN
DANVILLE, CALIFORNIA

1
2
3
4
5
6

PLEASE NOTE THE REVISION NUMBER AND DATE ARE FOR STRUCTURAL SHEETS ONLY.

Engineering Seal:

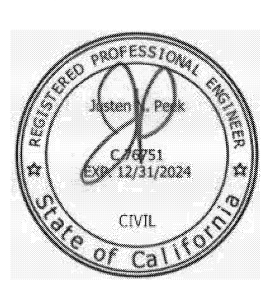

Sheet Description:
GENERAL STRUCTURAL SPECIFICATIONS AND NOTES

No Scale

Initial Issue Date:	March 24, 2023
Drawn By:	E. Bennett
Project Designer:	J. Peek
Project Manager:	J. Peek Ext. 23
Job No.	W021420
Sheet No.	SN2

DO NOT SCALE THESE DRAWINGS
PLAN SET ID: S-ME-R-P

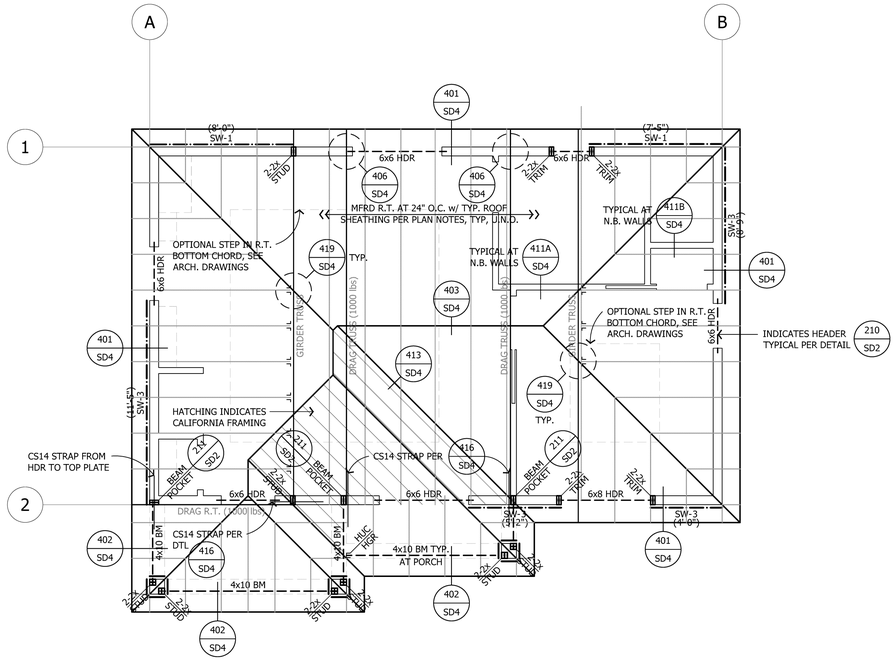

A ROOF FRAMING PLAN - MEDITERRANEAN

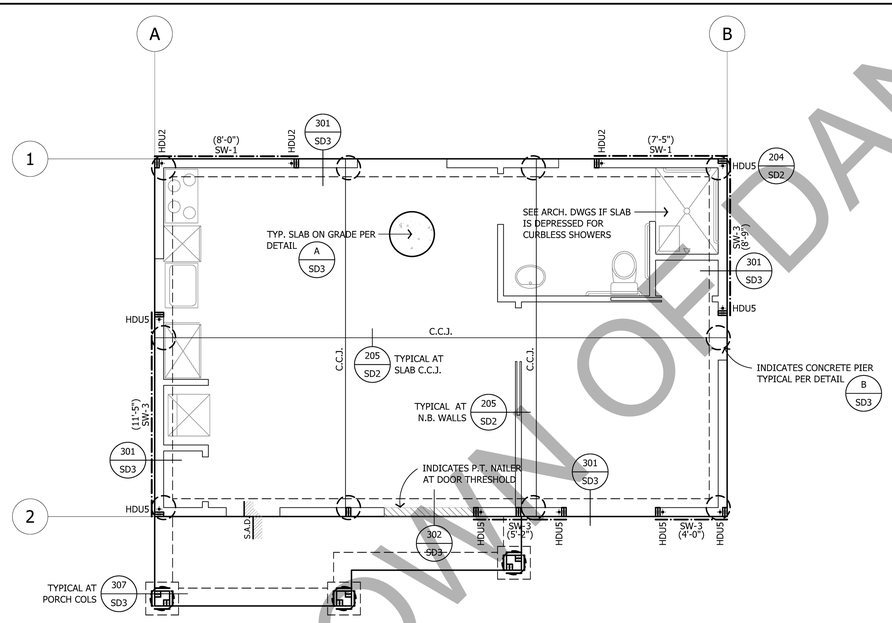

B FOUNDATION PLAN - MEDITERRANEAN - CONCRETE SLAB ON PIERS

FOUNDATION NOTES

1. SEE ARCHITECTURAL DRAWINGS FOR STUD SIZES AND OTHER REQUIREMENTS.
2. SEE ARCHITECTURAL DRAWINGS FOR ALL DIMENSIONS, ELEVATIONS, ETC. THE PROJECT ARCHITECT IS RESPONSIBLE FOR SPECIFYING DIMENSIONS TO ALL PROJECT ELEMENTS. THE DIMENSIONS SHOWN ON THE FOUNDATION PLANS SHALL NOT BE USED FOR CONSTRUCTION. THE FOUNDATION SHALL BE CONSTRUCTED USING THE DIMENSIONS SHOWN ON THE ARCHITECTURAL PLANS.
3. DETAIL KEYS AND OTHER INFORMATION ARE TYPICAL.
4. THE FOUNDATION SHALL CONSIST OF A UNIFORM THICKNESS REINFORCED CONCRETE STRUCTURAL SLAB PER DETAIL (B/SD3) SUPPORTED BY DRILLED CONCRETE PIERS PER (A/SD3)
   A. STEP FOUNDATION AS REQUIRED FOR FLOOR ELEVATION CHANGES AND COMPLIANCE WITH DETAILS. THE CONTRACTOR SHALL GRADE THE SITE TO PROVIDE PROPER SURFACE DRAINAGE AWAY FROM THE FOUNDATION AT ALL LOCATIONS. ROOF GUTTER DOWNSPOUTS SHALL NOT DISCHARGE NEAR THE FOUNDATION.
5. CONCRETE TIE BEAMS SHALL BE 12" x 18" AND SHALL BE REINFORCED WITH (2) #4 HORIZ. REINFORCING, TOP AND BOTTOM. TIE BEAM REINFORCEMENT SHALL CONTINUE THROUGH FOUNDATION ELEMENTS OR SHALL BE PROPERLY TIED TO FOUNDATION REINFORCING.
6. LANDSCAPE SLABS SHALL BE INDEPENDENT OF THE FOUNDATION. THE CONTRACTOR SHALL INSTALL ASPHALT-IMPREGNATED EXPANSIVE JOINT MATERIAL BETWEEN SLABS AND THE FOUNDATION.
7. HOLDOWNS:
   HOLDOWNS NOTED OCCUR AT THE LEVEL OF FRAMING SHOWN FOR CONNECTION OF WALLS ABOVE TO FOOTING.
   A. ALL HOLDOWN MEMBERS IN CONTACT WITH P.T. MATERIAL SHALL BE HOT-DIP GALVANIZED. USE HOT-DIPPED GALVANIZED ANCHOR BOLTS WITH 3" X 3" X 1/4" PLATE WASHERS. PLAIN CARBON STEEL FASTENERS IN SBX/DOT AND ZINC BORATE PRESERVATIVE-TREATED WOOD SHALL BE PERMITTED.
   B. ALL HOLDOWNS SHALL BE INSTALLED WITH ANCHORS PER DETAIL (112/SD1)
   C. CONTRACTOR SHALL REVIEW HOLDOWN ANCHOR REQUIREMENTS FOR EMBEDMENT CONDITIONS THAT REQUIRE DEEPENED STEM WALL. REFER TO FOR REQUIREMENTS. (112/SD1)
   D. PROVIDE POSTS AT ALL HOLDOWNS AS SHOWN IN DETAIL (112/SD1) WHERE DOUBLE 2x POSTS ARE USED, SISTER WITH 16d FACE NAILS AT SILL NAILING PER SHEARWALL SCHEDULE. WHERE 3x MEMBERS AT PANEL EDGES ARE REQUIRED, USE 4x MINIMUM POST FOR HOLDOWN PER FRAMER SHALL CONFIRM LAYOUT BEFORE CONCRETE IS POURED. NOTIFY ENGINEER OF CONFLICTS PRIOR TO PROCEEDING. (103/SD1)
8. CONTRACTOR SHALL REVIEW HOLDOWN ANCHOR REQUIREMENTS FOR EMBEDMENT CONDITIONS THAT REQUIRE DEEPENED FTG. REFER TO (112/SD1) FOR REQUIREMENTS.
9. REFER TO THE PROJECT SOILS REPORT IF APPLICABLE, FOR ADDITIONAL FOUNDATION AND SITE CONSTRUCTION REQUIREMENTS. ALL FOUNDATION ELEMENTS SHALL COMPLY WITH ALL CONDITIONS CONTAINED WITHIN APPROPRIATE SOILS REPORT AND REQUIREMENTS OF 2016 CBC CHAPTER 18. THE RESPONSIBLE SOILS ENGINEER IF APPLICABLE, SHALL OBSERVE ALL SLAB AND FOUNDATION SUBGRADES PRIOR TO PLACING CONCRETE. SEE SOILS REPORT FOR SPECIFIC INSPECTION REQUIREMENTS.
10. ALL FOUNDATION PLATES AND MUDSILLS SHALL BE PRESSURE-TREATED DOUGLAS FIR MARKED OR BRANDED BY AN APPROVED AGENCY. SEE SHEARWALL SCHEDULE FOR SHEARWALL LOCATIONS THAT REQUIRE 3x MINIMUM MUDSILLS. FOUNDATION PLATES AND MUDSILLS SHALL BE BOLTED TO THE FOUNDATION WITH NOT LESS THAN 5/8" DIA. HOT-DIPPED GALVANIZED ANCHOR BOLTS WITH 3" x 3" x 1/4" PLATE WASHERS. PLAIN CARBON STEEL FASTENERS IN SBX/DOT AND ZINC BORATE PRESERVATIVE-TREATED WOOD SHALL BE PERMITTED. EMBED ANCHOR BOLTS 7" INTO CONCRETE FOUNDATION, WALL OR 12" INTO GROUTED MASONRY, AND SPACE NOT MORE THAN 4'-0" APART, UNLESS NOTED OTHERWISE ON THE SHEARWALL SCHEDULE. THERE SHALL BE A MINIMUM OF TWO BOLTS PER BOARD WITH ONE BOLT LOCATED 12" MAXIMUM AND 4-3/8" MINIMUM OF EACH END. FOR ADDITIONAL INFORMATION SEE DETAIL (201/SD2)
11. SEE GENERAL NOTES FOR ADDITIONAL REQUIREMENTS.
    ALL DETAIL CALLOUTS SHALL BE CONSIDERED TYPICAL. CONTRACTOR SHALL REVIEW THE DETAIL SHEETS FOR DETAILS NOT SPECIFICALLY REFERENCED.
12. SHEARWALLS:
    LENGTHS OF SHEARWALLS ARE SHOWN ABOVE OR BELOW SHEARWALL NUMBER (SEE PLAN). THE NUMBERS INDICATE THE MINIMUM DESIGN LENGTH OF THE SHEARWALL. SEE DETAIL (103/SD1)

ROOF FRAMING NOTES

1. WALLS SHOWN AS SOLID ARE BELOW FRAMING. SEE ARCHITECTURAL DRAWINGS FOR STUD SIZES AND OTHER REQUIREMENTS.
2. SEE ARCHITECTURAL DRAWINGS FOR ALL DIMENSIONS, ELEVATIONS, ETC. THE PROJECT ARCHITECT IS RESPONSIBLE FOR SPECIFYING DIMENSIONS TO ALL PROJECT ELEMENTS.
3. DETAIL KEYS AND OTHER INFORMATION ARE TYPICAL.
4. ROOF FRAMING TERMS:
   ALL BEAMS SHALL BE CONSIDERED FLUSH, (TOP OF BEAM EQUAL TO TOP OF ROOF FRAMING AND BOTTOM OF ROOF FRAMING) UNLESS NOTED OTHERWISE ON PLANS AS ONE OF THE FOLLOWING:
   A. **DROPPED:** BEAM IS SET BELOW ROOF FRAMING WITH TOP OF BEAM SET AT BOTTOM OF ROOF FRAMING.
   B. **DOWNSET:** BEAM IS DEEPER THAN THE ROOF FRAMING AND SET WITH TOP OF BEAM EQUAL TO TOP OF ROOF FRAMING. BOTTOM OF BEAM EXTENDS BELOW ROOF FRAMING.
   C. **UPSET:** BEAM IS DEEPER THAN THE ROOF FRAMING AND SET WITH BOTTOM OF BEAM EQUAL TO BOTTOM OF ROOF FRAMING. TOP OF BEAM EXTENDS ABOVE ROOF FRAMING.
   D. **"HDR":** BOTTOM OF HEADER IS SET AT ROUGH OPENING (R.O.). SEE ARCH. FOR HEIGHT. IF HEADER BREAKS TOP PLATES INSTALL CS14 x 36" STRAP FROM FACE OF PLATE TO FACE OF HEADER, TYPICAL AT EACH END OF HEADER.
5. ROOF FRAMING:
   ROOF SHALL BE FRAMED WITH PRE-MANUFACTURED ROOF TRUSSES AT 24" O.C. INSTALLED PER APPROVED ROOF TRUSS SHOP DRAWINGS. ROOF TRUSS MANUFACTURER SHALL DESIGN THE ROOF TRUSSES AS SPECIFIED IN THE GENERAL NOTES (SHEET SN-2, U.N.O.). SEE ROOF TRUSS DETAILS DETAILS ON SHEET SD4 FOR TYPICAL DETAILING.
   A. ROOF TRUSSES WITH FLAT BOTTOM CHORDS SHALL BE SECURED TO END BEARING POINTS WITH "H1" CLIP TO TOP PLATE. ROOF TRUSSES WITH SLOPED BOTTOM CHORDS SHALL BE SECURED TO BEARING POINTS WITH SIMPSON "TC" CLIPS OR EQUIVALENT CONNECTORS THAT ALLOW HORIZONTAL MOVEMENT IN ACCORDANCE WITH THE ROOF TRUSS DESIGNER'S REQUIREMENTS.
   B. PROVIDE 2x BLOCKING BELOW ALL HIPS, VALLEYS, AND RIDGES. CONTRACTOR SHALL INSTALL STRONGBACKS, CROSS BRIDGING, AND/OR BRACING AS SPECIFIED BY THE ROOF TRUSS SHOP DRAWINGS.
6. MANUFACTURED BEAM FRAMING:
   ALL MANUFACTURED WOOD BEAMS SHALL BE MANUFACTURED BY "TRUS JOIST" WEYERHAUSER. REFER TO "GENERAL FRAMING NOTES" ON SHEET SN1 FOR MATERIAL SPECIFICATIONS.
7. ROOF SHEATHING:
   TYPICAL ROOF SHEATHING SHALL BE 15/32" THICK (24/0 OR 32/16) CDX GRADE PLYWOOD (OR EQUIVALENT-RATED ORIENTED STRAND BOARD (O.S.B.) WITH GAP PER MANUFACTURER. ROOF SHEATHING SHALL BE NAILED WITH 8d AT 6" O.C. (EDGES) AND 8d AT 12" O.C. (FIELD), UNLESS NOTED OTHERWISE ON THE PLAN. ORIENT SHEATHING WITH FACE GRAIN PERPENDICULAR TO FRAMING MEMBERS, AND STAGGER END JOINTS.
   A. PLYWOOD SHEETS LOCATED AT ROOF EDGES OR CHANGES IN FRAMING SHALL BE AT LEAST 24 INCHES WIDE OR SHALL BE EDGE BLOCKED AND NAILED. EDGE NAIL PLYWOOD TO ALL GABLE AND SHEAR TRUSSES (TRUSSES WITH DRAG LOADS).
   B. EDGE NAIL ROOF PLYWOOD TO ALL DRAG MEMBERS (RAFTERS OR BEAMS w/ HORIZ. STRAPS).
8. SUPPORT OF BEAMS, HIPS, GIRDERS, ETC.:
   INSTALL POSTS (POST SIZE TO MATCH BEAM AND WALL SIZE), MINIMUM BELOW ALL ROOF BEAMS AND GIRDERS. CONTRACTOR SHALL VERIFY FRAMING LAYOUT TO ENSURE CONTINUOUS AND SOLID BLOCKING UNDER ALL CONCENTRATED LOADS.
9. CRICKETS AND/OR CALIFORNIA (BUILT-UP FRAMING):
   CRICKETS AND/OR CALIFORNIA FRAMING SHALL BE CONSTRUCTED WITH 2x6 MEMBERS AT 24" O.C. SUPPORTED TO THE ROOF BELOW AT 48 INCHES ON CENTER. ROOF PLY SHALL CONTINUE BELOW CRICKETS AND/OR CALIFORNIA FRAMING.
10. HEADERS:
    WINDOW AND DOOR HEADERS SHALL CONFORM TO THE HEADER SCHEDULE, U.N.O. ON THE PLAN (210/SD2)
11. TOP PLATE SPLICES:
    TOP PLATE SPLICES OF ALL WALLS SHALL CONFORM TO DETAIL (209/SD2)
    INSTALL CS14 x 3'-0" LONG STRAPS AT TOP PLATE SLOPE CHANGES AND OTHER DISCONTINUOUS TOP PLATE CONDITIONS.
12. **TOP CONNECTORS SHALL BE INSTALLED AT EXTERIOR WALL TOP PLATES AT 4'-0" O.C. MINIMUM WHERE SHEAR IS NOT NOTED ON PLANS.**
13. SEE GENERAL NOTES FOR ADDITIONAL REQUIREMENTS. ALL DETAIL CALLOUTS SHALL BE CONSIDERED TYPICAL. THE CONTRACTOR SHALL REVIEW THE DETAIL SHEETS FOR DETAILS NOT SPECIFICALLY REFERENCED.
14. SHEARWALLS AT OPENING TRIMMERS:
    WHERE SHEARWALL LENGTH SPECIFIED ON PLANS REQUIRES EDGE NAILING TO WINDOW AND/OR DOOR TRIMMERS, REFER TO DETAIL (108/SD1)
15. SHEARWALLS:
    LENGTHS OF SHEARWALLS ARE SHOWN ABOVE OR BELOW SHEARWALL NUMBER (SEE PLAN). THE NUMBERS INDICATE THE MIN. DESIGN LENGTH OF THE SHEARWALL. SEE (103/SD1)
16. HOLDOWN STRAPS
    WHERE HOLDOWN STRAPS ARE SPECIFIED ON PLANS, INSTALL PER DETAIL (112/SD1) (113/SD1)
    A. **ALL NAIL HOLES SHALL BE FILLED ON HOLDOWN STRAPS**

ADVANCED ENGINEERING
3381 Walnut Blvd. Ste. 220
Brentwood, CA 94513
Office: 925.516.3502
Fax: 925.262.4662

THE DRAWINGS AND SPECIFICATIONS APPEARING HEREIN CONSTITUTE THE ORIGINAL WORK OF **DP ADVANCED ENGINEERING, INC.** AND SHALL BE CONSIDERED CONFIDENTIAL AND PROPRIETARY PROPERTY. COPYING OR REPRODUCING ANY PORTION OF THESE DOCUMENTS WITHOUT WRITTEN AUTHORIZATION IS STRICTLY PROHIBITED. THE CONTRACT DOCUMENTS WERE PREPARED FOR USE ON THIS SPECIFIC SITE IN CONJUNCTION WITH ITS ISSUE DATE AND ARE NOT SUITABLE FOR USE ON A DIFFERENT SITE OR AT A LATER TIME. USE OF THESE DRAWINGS FOR REFERENCE OR EXAMPLE ON ANOTHER PROJECT REQUIRES THE SERVICES OF A PROPERLY LICENSED ENGINEER. REPRODUCTION OF THE CONTRACT DOCUMENTS FOR REUSE ON ANOTHER PROJECT IS NOT AUTHORIZED.

TOWN OF DANVILLE
ACCESSORY DWELLING UNIT
MEDITTERANEAN
DANVILLE, CALIFORNIA

1	
2	
3	
4	
5	
6	

PLEASE NOTE THE REVISION NUMBER AND DATE ARE FOR STRUCTURAL SHEETS ONLY.

Engineering Seal:

Sheet Description:
STUDIO
STRUCTURAL ROOF FRAMING PLAN AND FOUNDATION PLAN

Scale: 1/4" = 1'-0"

Initial Issue Date:	March 24, 2023
Drawn By:	E. Bennett
Project Designer:	J. Peek
Project Manager:	J. Peek Ext. 23
Job No.	W021420
Sheet No.	S1

TOWN OF DANVILLE

DO NOT SCALE THESE DRAWINGS
PLAN SET ID: S-ME-R-P

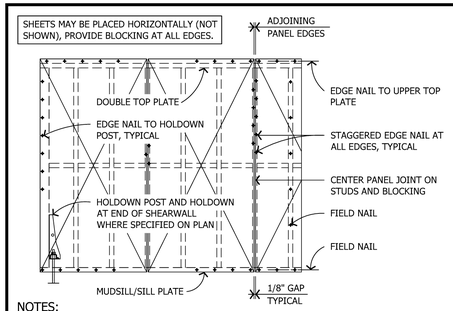

NOTES:

1. SEE SHEARWALL SCHEDULE FOR REQUIRED SHEATHING, NAILING, AND SILL CONNECTIONS.
2. FOR LOCATION OF TIEDOWNS AND TD POSTS, SEE TYPICAL DETAILS ON SHEET SD2.

101 TYP. SHEARWALL ELEVATION

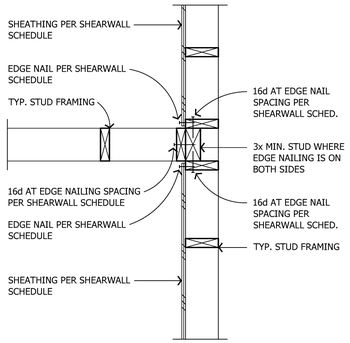

102 SHEARWALL INTERSECTION PLAN

	SHEARWALL LENGTH: SHEARWALL DESIGNATION:	X'-X" SW-1	X'-X" SW-2	X'-X" SW-3	X'-X" SW-4	X'-X" SW-5
1/2" SHEATHING (ONE FACE)	PLYWOOD OR O.S.B. SHEATHING THICKNESS:	15/32"	15/32"	15/32"	15/32"	15/32" STR. 1
	10d EDGE NAIL (0.148 DIA):	10d @ 6" O.C.	10d @ 4" O.C.	10d @ 3" O.C.	10d @ 2" O.C.	10d @ 2" O.C.
	10d FIELD NAIL (0.148 DIA.):	10d @ 12" O.C.	10d @ 12" O.C.	10d @ 12" O.C.	10d @ 12" O.C.	10d @ 12" O.C.
	FRAMING MEMBER AT ADJOINING PANEL EDGES:	SINGLE 2x	SINGLE 3x, 4x OR 2-2x w/ 10d @ 4" O.C.	SINGLE 3x, 4x OR 2-2x w/ 10d @ 3" O.C.	SINGLE 3x OR 4x	SINGLE 3x OR 4x
	3x SILL REQ. (NOTE 6):	NO	NO	NO	YES	YES
	SILL CONNECTION: 16d NAIL (0.148 DIA.): SDS SCREW (SDS25600):	16d @ 4" O.C. SDS @ 21" O.C.	16d @ 3" O.C. SDS @14" O.C.	16d @ 2" O.C. SDS @ 9" O.C.	-- SDS @ 7" O.C.	-- SDS @ 6" O.C.
	5/8" DIA. MUDSILL A.B.: WITH 2x SILL	@ 48" O.C. MAX	@ 38" O.C. MAX	@ 29" O.C. MAX	@ 28" O.C. MAX	@ 26" O.C. MAX
	TOP CONNECTION - "RBC" TOP CONNECTION - "LTP4" TOP CONNECTION - "A35"	@ 16" O.C. MAX @ 23" O.C. MAX @ 24" O.C. MAX	@ 10" O.C. MAX @ 15" O.C. MAX @ 18" O.C. MAX	@ 8" O.C. MAX @ 12" O.C. MAX @ 13" O.C. MAX	@ 6" O.C. MAX @ 8" O.C. MAX @ 10" O.C. MAX	@ 6" O.C. MAX @ 8" O.C. MAX @ 8" O.C. MAX
	ALLOWABLE SHEAR	310	460	600	770	870

	SHEARWALL LENGTH: SHEARWALL DESIGNATION:	X'-X" SW-6	X'-X" SW-7	X'-X" SW-8
1/2" SHEATHING (EA. FACE)	PLYWOOD OR O.S.B. SHEATHING THICKNESS:	15/32" STR. 1 EACH FACE	15/32" STR. 1 EACH FACE	15/32" STR. 1 EACH FACE
	10d EDGE NAIL (0.148 DIA):	10d @ 4" O.C.	10d @ 3" O.C.	10d @ 2" O.C.
	10d FIELD NAIL (0.148 DIA.):	10d @ 12" O.C.	10d @ 12" O.C.	10d @ 12" O.C.
	FRAMING MEMBER AT ADJOINING PANEL EDGES:	SINGLE 3x OR 4x	SINGLE 3x OR 4x	SINGLE 3x OR 4x
	3x SILL REQ. (NOTE 6):	YES	YES	YES
	SILL CONNECTION: LAG SCREW (1/2" DIA.x7.5"): SDS SCREW (SDS25600):	LAG @ 7" O.C. SDS @ 5" O.C.	LAG @ 5" O.C. SDS @ 4" O.C.	LAG @ 4" O.C. SDS @ 3" O.C.
	5/8" DIA. MUDSILL A.B.: WITH 3x SILL	@ 18" O.C. MAX	@ 16" O.C. MAX	@ 12" O.C. MAX
	TOP CONNECTION - "RBC" TOP CONNECTION - "LTP4" TOP CONNECTION - "A35"	@ 5" O.C. MAX @ 7" O.C. MAX @ 8" O.C. MAX	-- -- @ 5" O.C. MAX @ 6" O.C. MAX	-- -- @ 4.5" O.C. MAX
	ALLOWABLE SHEAR	1020	1330	1740

1. ALL NAILS SHALL HAVE MINIMUM SHANK DIAMETER AS SPECIFIED IN SCHED.
   A. GALVANIZED NAILS SHALL BE HOT DIPPED OR TUMBLED.
   B. ALL FASTENERS THAT ARE INSTALLED INTO OR IN CONTACT WITH PRESSURE TREADED LUMBER ARE TO BE HOT DIPPED GALVANIZED
2. PLYWOOD AND OSB SHALL BE TYPE CDX GRADE OR BETTER (EXCEPT WHERE STRUCTURAL 1 GRADE IS NOTED).
   A. STR. 1 = STRUCTURAL 1 GRADE PLYWOOD / O.S.B.
3. WHEN FASTENERS ARE SPACED LESS THEN 4" ON CENTER, NAILING AT PANEL EDGES SHOULD BE STAGGERED PER DETAIL 104A/SD1
4. ALL DOUBLE SIDED WALLS REQUIRE 3x SILL, MIN.
5. PREDRILL SILL CONNECTIONS WHERE NEEDED TO AVOID WOOD SPLITTING. USE DRILL BIT SIZE = 0.75 x NAIL (OR SCREW) DIAMETER.
6. 3x SILL PLATES MAY BE OMITTED WHEN ALTERNATE SHEATHING JOINT AT RIM OR BLOCKING IS PROVIDED PER DETAIL 107/SD1
7. INSTALL DBL 2x POST MIN. AT END OF SHEARWALLS. IF 3x FRAMING MEMBERS ARE REQUIRED USE 4x POST MINIMUM.
8. ALL ANCHOR BOLTS MUST BE INSTALLED WITH 3"x3"x0.229" GALVANIZED PLATE WASHERS PER THE CURRENT CBC.
9. WHERE SHEAR MATERIAL IS APPLIED ON BOTH FACES OF A SHEARWALL, AND NAIL SPACING IS LESS THAN 6" O.C. ALL THE FOLLOWING REQ. SHALL BE MET:
   A. USE 3x SILLS AND 3x TOP PLATES.
   B. THE VERTICAL SHEAR PANEL JOINTS ON OPPOSITE FACES SHALL BE OFFSET TO FALL ON DIFFERENT FRAMING MEMBERS, UNLESS SUCH FRAMING MEMBERS ARE 4x OR THICKER.
   C. INSTALL 4x RIM / BLOCKING MINIMUM BELOW ALL DOUBLE SIDED SHEARWALLS.
10. FOR ALTERNATE MUDSILL ANCHORAGE, SEE DETAIL 109/SD1

103 SHEARWALL SCHEDULE

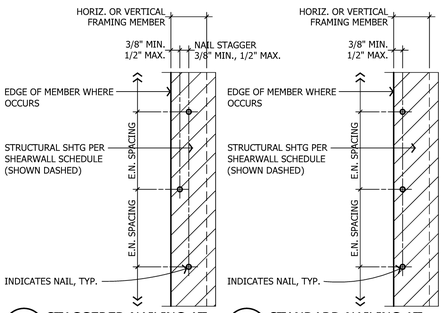

104A STAGGERED NAILING AT SPACING OF 3" OR LESS

104B STANDARD NAILING AT SPACE OF 4" OR GREATER

104 TYP. SHEARWALL EDGE NAIL PATTERN

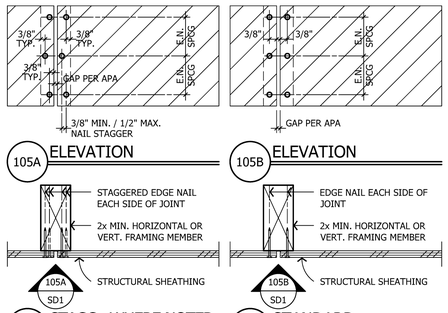

105A ELEVATION

105B ELEVATION

105C STAGG., WHERE NOTED PLAN VIEW

105D STANDARD PLAN VIEW

105 SHEARWALL SHEATHING AT JOINT

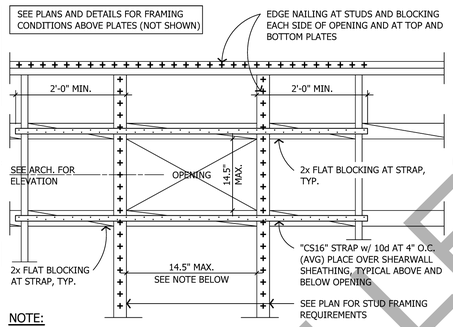

NOTE:

OPENING MAY BE PROVIDED IN SHEARWALLS FOR VENTS, ETC. PROVIDING THE VENT(S) WIDTH DOES NOT EXCEED 10 PERCENT OF THE TOTAL SHEARWALL LENGTH IN THAT LINE OF SHEARWALLS.

106 SMALL OPENING IN SHEARWALL

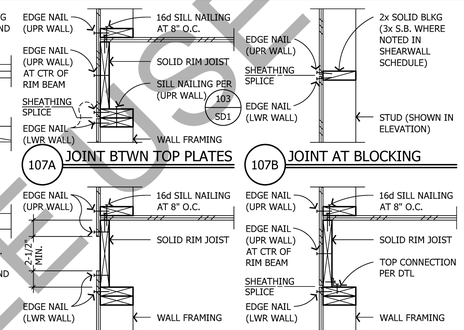

107A JOINT BTWN TOP PLATES

107B JOINT AT BLOCKING

107C JOINT AT SOLID RIM

107D JOINT AT B.O. RIM SIM. AT T.O. RIM

1. FOR ADDITIONAL EDGE NAIL REQUIREMENTS, SEE DETAIL 104/SD1 AND 105/SD1
2. JOINT FLASHING AT ALL HORIZONTAL SHEATHING JOINTS WHEN EXPOSED TO WEATHER, S.A.D.

107 SHEATHING JOINT AT RIM OR BLKG

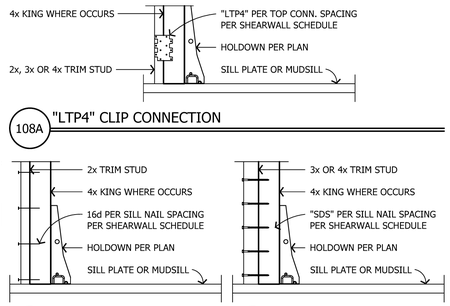

108A "LTP4" CLIP CONNECTION

108B NAILED CONNECTION

108C SCREWED CONN.

108 TRIM STUD TO HOLDOWN POST

STRAP HOLDOWN SCHEDULE				
STRAP	END LENGTH	FASTENERS EA. END	MIN. POST SIZE	ALLOWABLE LOAD
"CS14"	15"	(13) 10d (0.148 DIA . x 2-1/2")	(2) 2x	2490 lbs
(2) "CS14"	15"	(13) 10d (0.148 DIA . x 2-1/2") EACH STRAP	4x4 / (2) 2x6	4980 lbs
"CMST14"	30"	(33) 10d (0.148 DIA . x 2-1/2")	4x6 / 6x6	6490 lbs
"CMST12"	39"	(43) 10d (0.148 DIA . x 2-1/2")	4x8 / 6x6	9215 lbs

1. FILL ALL NAIL HOLES PER MANUFACTURER'S REQUIREMENTS.
2. STRAPS SHALL BE INSTALLED OVER PLYWOOD SHEATHING.
3. STRAPS MUST BE INSTALLED FLAT TO THE FACE OF THE POST. NO BENDS, NICKS OR SLACK OF ANY KIND ARE ALLOWED. STRAPS INSTALLED WITH ANY BENDS, NICKS OR SLACK SHALL BE CONSIDERED AS INADEQUATE AND MUST BE RE-INSTALLED.
4. STRAPS MUST BE INSTALLED VERTICALLY WHEN USED AS A HOLDOWN. STRAPS INSTALLED ON A SLOPE OR AT AN ANGLE SHALL BE CONSIDERED AS INADEQUATE AND MUST BE RE-INSTALLED.
5. LOADS INCLUDE A 60% LOAD DURATION INCREASE ON THE FASTENERS FOR WIND OR SEISMIC.
6. CMST STRAPS ONLY - USE EVERY OTHER ROUND HOLE IF THE WOOD TENDS TO SPLIT. INCREASE STRAP LENGTH AS REQUIRED TO ACHIEVE MINIMUM NUMBER OF FASTENERS LISTED IN TABLE ABOVE.
7. PRE-DRILL HOLES TO PREVENT WOOD SPLITTING AS REQUIRED.

NOTE: A. WHERE NOTED, SB1x30 REQUIRES FOOTING WIDTH TO BE 18" WIDE.

SCREWED / BOLTED HOLDOWN SCHEDULE				
ANCHOR	POST CONNECTORS	HOLDOWN ANCHOR	MIN. POST	ALLOW. LOAD
"HDU2"	(6) SDS25212 SCREWS	SSTB24 OR SB5/8x24	(2) 2x	2940 lbs
"HDU4"	(10) SDS25212 SCREWS	SSTB24 OR SB5/8x24	(2) 2x	3815 lbs
"HDU5"	(14) SDS25212 SCREWS	SSTB24 OR SB5/8x24	(2) 2x	5645 lbs
"HDU8"	(20) SDS25212 SCREWS	SSTB28 OR SB7/8x24	4x6 / 6x6	7855 lbs
"HDU11"	(30) SDS25212 SCREWS	SB1x30 (A)	4x8 / 6x6	11175 lbs
"HDU14"	(36) SDS25212 SCREWS	PAB8 (OR EQUIV.)	4x8 / 6x6	14390 lbs
"HD19"	(5) 1" DIA. A307 BOLTS	PAB10 (OR EQUIV.)	4x8 / 6x6	19070 lbs

1. RE-TIGHTEN ALL BOLTS PRIOR TO SHEARWALL CLOSE-IN.
2. DOUBLE 2x HOLDOWN POSTS SHALL BE SISTERED TOGETHER PER SILL NAILING REQUIREMENTS FOR SHEARWALL TYPE. SEE DETAIL 103/SD1 FOR MORE INFORMATION.
3. CONTRACTOR'S OPTION TO SUBSTITUTE "STHD" TYPE HOLDOWNS:

ANCHOR	"STHD" OPTION	POST CONNECTORS	MIN. POST	ALLOW. LOAD
"HDU2"	"STHD10"	(20) 16d SINKERS	(2) 2x	2940 lbs
"HDU4"	"STHD14"	(24) 16d SINKERS	(2) 2x	3815 lbs

112 SLAB HOLDOWN SCHEDULES

ALTERNATIVE MUDSILL ANCHORAGE THE FOLLOWING ALTERNATIVE ANCHORAGE MAY BE INSTALLED IN LIEU OF 5/8" DIA. ANCHOR BOLTS NOTED IN THE SHEARWALL SCHEDULE AND PLAN NOTES.			
SHEARWALL DESIGNATION	"MASA" (NOTE 1.) 110/SD1	"TITEN HD" (NOTE 2.) 111/SD1	
X'-X" SW-1	32" O.C.	48" O.C.	
X'-X" SW-2	22" O.C.	36" O.C.	
X'-X" SW-3	16" O.C.	28" O.C.	
X'-X" SW-4	10" O.C. 3x SILL REQUIRED	24" O.C.	
X'-X" SW-5	9" O.C. 3x SILL REQUIRED	24" O.C.	
X'-X" SW-6	8" O.C. 3x SILL REQUIRED	24" O.C. 3/4" DIA. TITEN HD	
X'-X" SW-7 & SW-8	NOT ALLOWED	16" O.C. 3/4" DIA. TITEN HD	

1. SIMPSON "MASA" ANCHORS SHALL BE INSTALLED PER ICC REPORT No. ESR-2555.
2. SIMPSON TITEN HD ANCHORS SHALL BE INSTALLED PER ICC REPORT NO. ESR-2713.

109 ALTERNATIVE MUDSILL ANCHORAGE

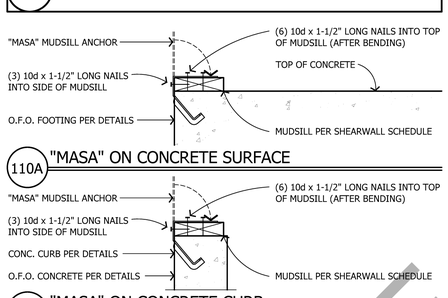

110A "MASA" ON CONCRETE SURFACE

110B "MASA" ON CONCRETE CURB

1. FULL LOADS APPLY FOR SPALLS UP TO A MAX OF 1-1/4" AND A MAX DEPTH OF 7/8". ANY EXPOSED PORTION OF THE "MASA" MUST BE PROTECTED AGAINST POSSIBLE CORROSION.
2. MINIMUM "MASA" END DISTANCE IS 4" AND MINIMUM CENTER-TO-CENTER SPACING IS 8"

110 MASA ANCHORAGES

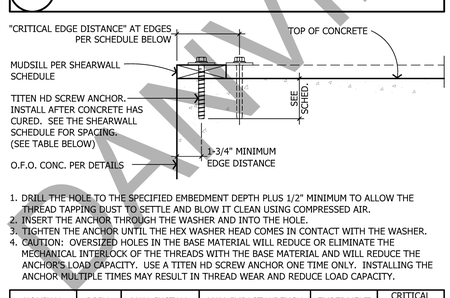

1. DRILL THE HOLE TO THE SPECIFIED EMBEDMENT DEPTH PLUS 1/2" MINIMUM TO ALLOW THE THREAD TAPPING DUST TO SETTLE AND BLOW IT CLEAN USING COMPRESSED AIR.
2. INSERT THE ANCHOR THROUGH THE WASHER AND INTO THE HOLE.
3. TIGHTEN THE ANCHOR UNTIL THE HEX WASHER HEAD COMES IN CONTACT WITH THE WASHER.
4. CAUTION: OVERSIZED HOLES IN THE BASE MATERIAL WILL REDUCE OR ELIMINATE THE MECHANICAL INTERLOCK OF THE THREADS WITH THE BASE MATERIAL AND WILL REDUCE THE ANCHOR'S LOAD CAPACITY. USE A TITEN HD SCREW ANCHOR ONE TIME ONLY. INSTALLING THE ANCHOR MULTIPLE TIMES MAY RESULT IN THREAD WEAR AND REDUCE LOAD CAPACITY.

NOMINAL ANCHOR DIA.	DRILL BIT DIA.	MAX. INSTALL TORQUE	MAX. IMPACT WRENCH TORQUE RATING	EMBEDMENT DEPTH	CRITICAL EDGE DISTANCE
5/8"	5/8"	100	340	6.5"	6 3/8"
3/4"	3/4"	150	385	7.5"	7 5/16"

111 "TITEN HD" ANCHORAGE & NOTES

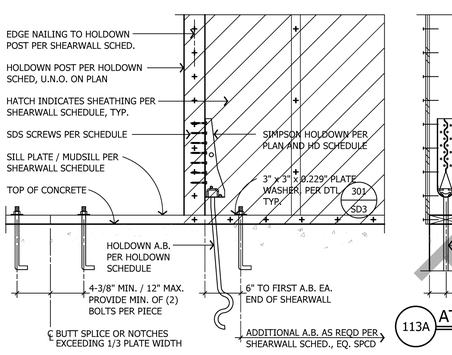

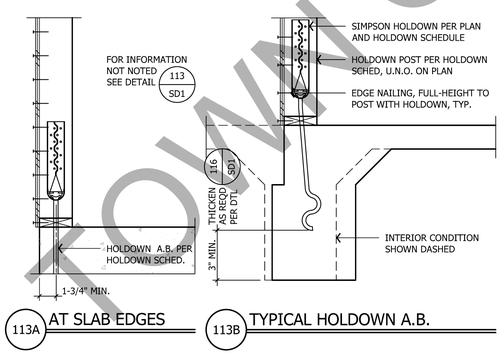

113A AT SLAB EDGES

113B TYPICAL HOLDOWN A.B.

113 TYPICAL HOLDOWN AND HOLDOWN ANCHOR BOLT INSTALLATION

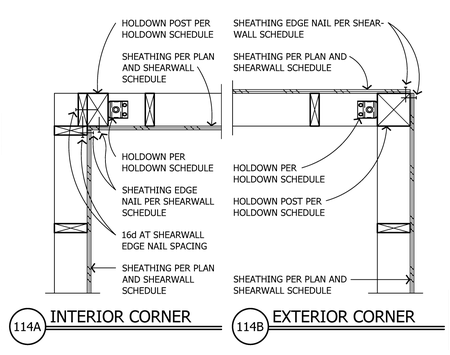

114A INTERIOR CORNER

114B EXTERIOR CORNER

114 HOLDOWN AT SHEARWALL CORNER (PLAN)

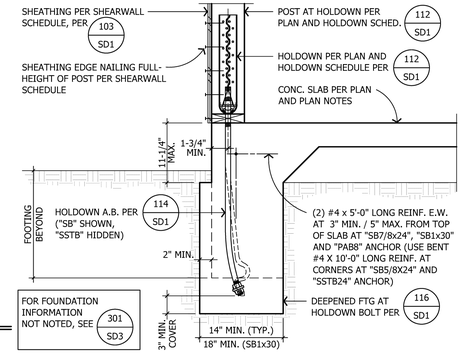

115 HOLDOWN A.B. TO EXTERIOR FOOTING

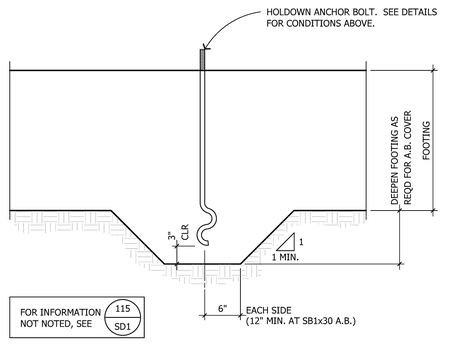

116 DEEPENED FOUNDATION (FOR A.B.)

TOWN OF DANVILLE
SAMPLE USE ONLY

ADVANCED ENGINEERING
3361 Walnut Blvd. Ste. 100
Brentwood, CA 94513
Office: 925.516.3502
Fax: 925.262.4662

THE DRAWINGS AND SPECIFICATIONS APPEARING HEREIN CONSTITUTE THE ORIGINAL WORK OF **DP ADVANCED ENGINEERING, INC.** AND SHALL BE CONSIDERED CONFIDENTIAL AND PROPRIETARY PROPERTY. COPYING OR REPRODUCING ANY PORTION OF THESE DOCUMENTS WITHOUT WRITTEN AUTHORIZATION IS STRICTLY PROHIBITED. THE CONTRACT DOCUMENTS WERE PREPARED FOR USE ON THIS SPECIFIC SITE IN CONJUNCTION WITH ITS ISSUE DATE AND ARE NOT SUITABLE FOR USE ON A DIFFERENT SITE OR AT A LATER TIME. USE OF THESE DRAWINGS FOR REFERENCE OR EXAMPLE ON ANOTHER PROJECT REQUIRES THE SERVICES OF A PROPERLY LICENSED ENGINEER. REPRODUCTION OF THE CONTRACT DOCUMENTS FOR REUSE ON ANOTHER PROJECT IS NOT AUTHORIZED.

TOWN OF DANVILLE
ACCESSORY DWELLING UNIT
MEDITERRANEAN

DANVILLE, CALIFORNIA

1	PLAN CHECK RESPONSES	04-19-23
2		
3		
4		
5		
6		

PLEASE NOTE THE REVISION NUMBER AND DATE ARE FOR STRUCTURAL SHEETS ONLY.

Engineering Seal:

Sheet Description:

SHEARWALL SCHEDULE AND HOLDOWN SCHEDULE AND TYPICAL DETAILS

No Scale

Initial Issue Date: March 24, 2023

Drawn By: E. Bennett

Project Designer: J. Peek

Project Manager: J. Peek Ext. 23

Job No. G010120

Sheet No. SD1

DO NOT SCALE THESE DRAWINGS

PLAN SET ID: S-ME-R-P

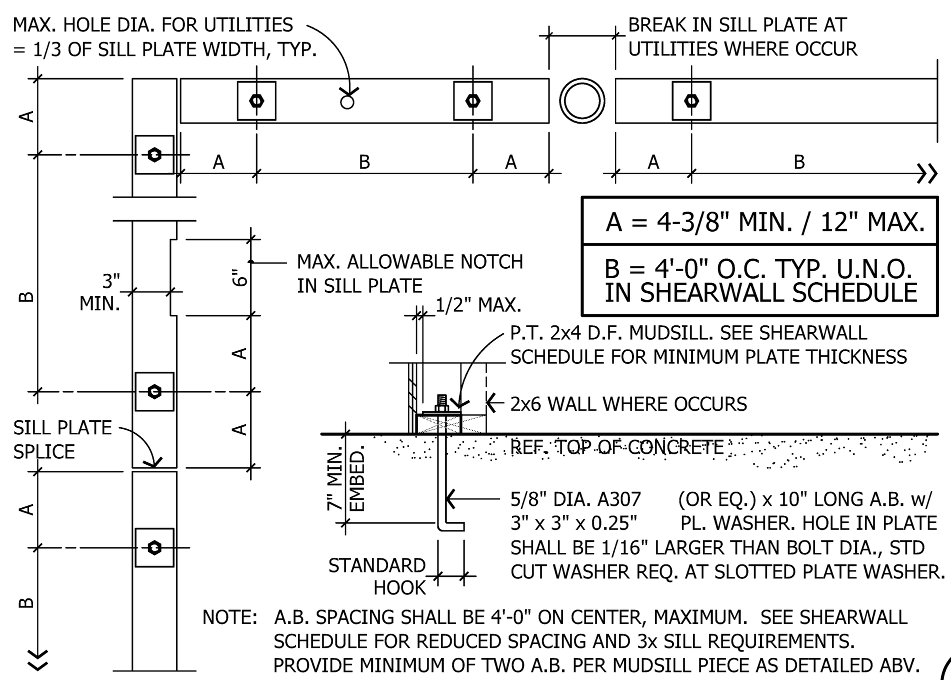

A = 4-3/8" MIN. / 12" MAX.

B = 4'-0" O.C. TYP. U.N.O. IN SHEARWALL SCHEDULE

NOTE: A.B. SPACING SHALL BE 4'-0" ON CENTER, MAXIMUM. SEE SHEARWALL SCHEDULE FOR REDUCED SPACING AND 3x SILL REQUIREMENTS. PROVIDE MINIMUM OF TWO A.B. PER MUDSILL PIECE AS DETAILED ABV.

VERIFY EXACT LOCATION OF FRAMING BEFORE ANCHOR BOLT PLACEMENT.

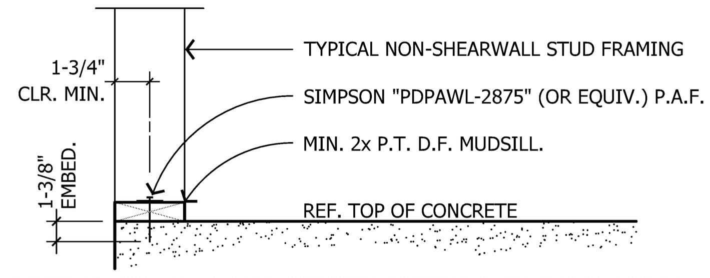

SHOT PIN ALTERNATE: AT INTERIOR WALLS, POWDER ACTUATED FASTENERS (SHOT PINS) MAY BE USED TO ANCHOR MUDSILL TO THE FOUNDATION AT NON-SHEARWALL LOCATIONS ONLY. PROVIDED THE POWDER ACTUATED FASTENERS ARE INSTALLED PER THE REQUIREMENTS LISTED BELOW:

1. P.A.F. ARE ONLY PERMITTED AT INT. NON-STRUC. WALLS. DO NOT INSTALL P.A.F. IN LOCATIONS WHERE BEARING, SHEARWALLS OR BRACED WALLS ARE NOTED ON THE PLANS
2. SIMPSON P.A.F. SHALL BE GALVANIZED AND INSTALLED PER I.C.C. REPORT ESR-2138
3. MIN. EMBED. OF FASTENER IS ACHIEVED WHEN THE WASHER IS FULLY BRNG ON THE PLATE.
4. FASTENERS MUST NOT BE DRIVEN UNTIL CONCRETE HAS REACHED A MINIMUM COMPRESSIVE STRENGTH OF 2000 psi.
5. FASTENERS MUST BE DRIVEN INTO A PRESSURE-TREATED 2x WOOD SILL PLATE AND MUST BE AT LEAST 1-3/4" FROM THE CONCRETE EDGE.
6. P.A.F. SHALL BE INSTALLED AT 32" O.C. EACH PIECE OF PLATE SHALL HAVE A MIN. OF TWO FASTENERS PLACED AT 6" FROM THE ENDS WITH A MIN. SPACING OF 4" BETWEEN P.A.F.

201A SHOT PIN PLACEMENT AT NON-STRUCTURAL WALLS

201 TYPICAL ANCHOR BOLT AND SHOT PIN PLACEMENT

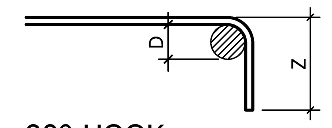

90° HOOK

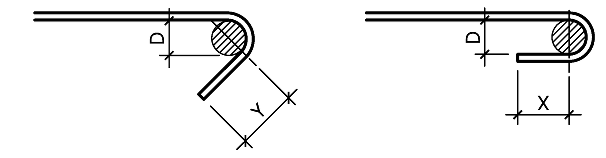

135° HOOK

180° HOOK

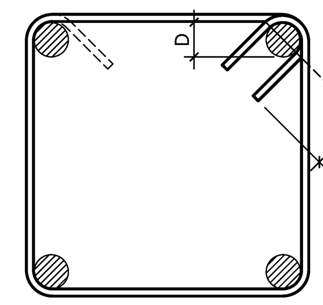

TIES / STIRRUPS

MIN. REQUIRED HOOK LENGTHS

BAR	#3	#4	#5	#6	#7	#8
"D"	2-1/4"	3"	3-3/4"	4-1/2"	5-1/4"	6"
"X"	2-1/2"	2-1/2"	2-1/2"	3"	3-1/2"	4"
"Y"	3"	3"	3-3/4"	4-1/2"	5-1/4"	6"
"Z"	5"	6"	7"	8"	10"	11"

MIN. REQUIRED LAP LENGTHS

BAR SIZE	#3	#4	#5	#6	#7	#8
"L"	22"	29"	36"	43"	63"	72"

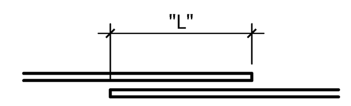

LAP SPLICE

202 TYP. REINFORCING HOOKS AND LAPS

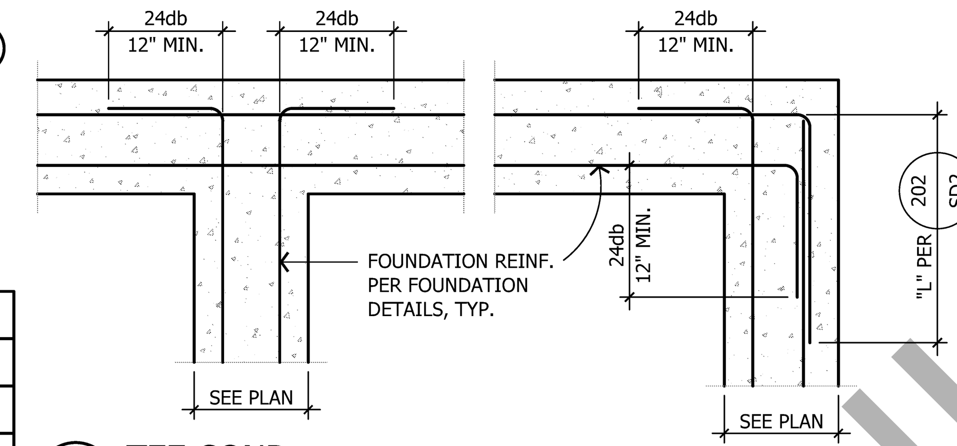

203A TEE COND.

203B CORNER COND.

NOTES:

1. db = BAR DIAMETER
2. PLACE ALL BENDS HORIZONTALLY.
3. FOR SINGLE CURTAIN STEEL PROVIDE SIMILAR BENDS AT 3" CLEAR FROM FAR FACE OF FOOTING, U.N.O.

203 STD REINF. HOOKS - DOUBLE ROW

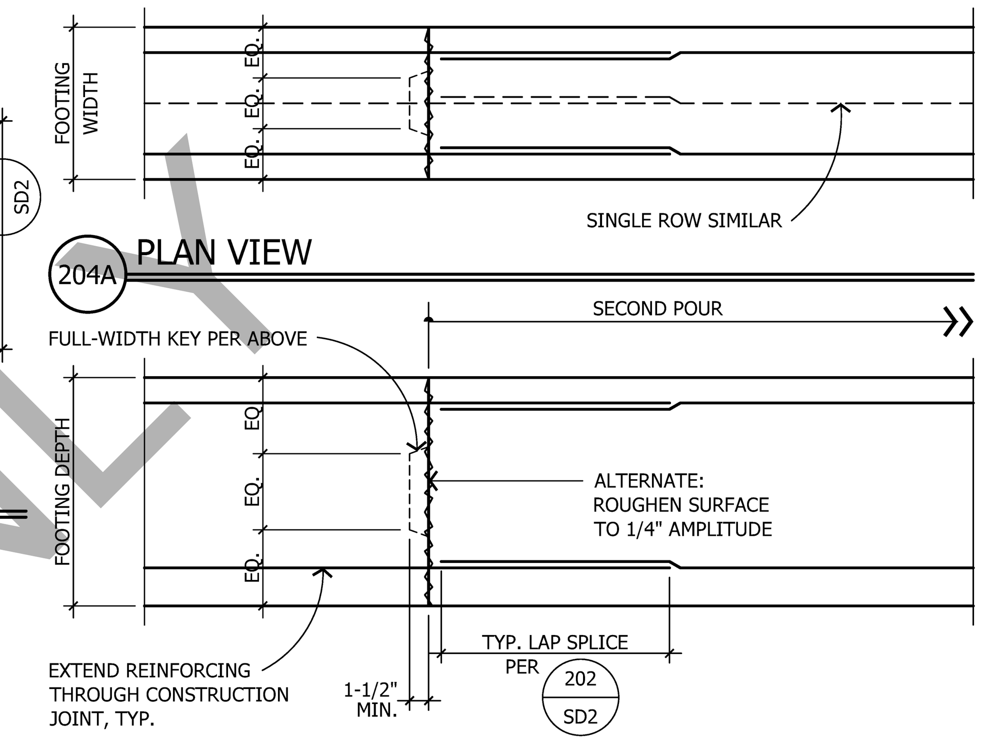

204 FOOTING CONSTRUCTION JOINT

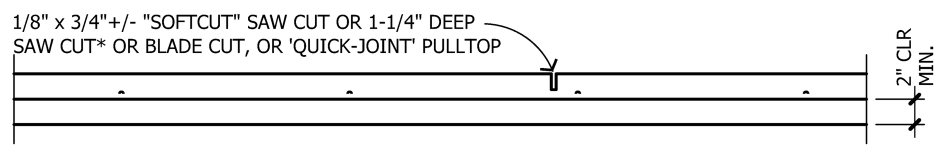

205A CONTROL JOINT

* JOINT TO BE CUT WITHIN 12 HOURS OF CONCRETE POUR

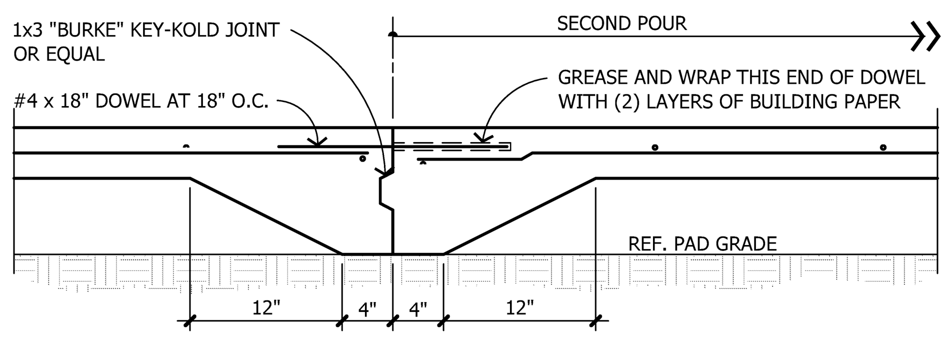

205B CONSTRUCTION JOINT

205 CRACK CONTROL JOINTS (SLAB-ON-GRADE)

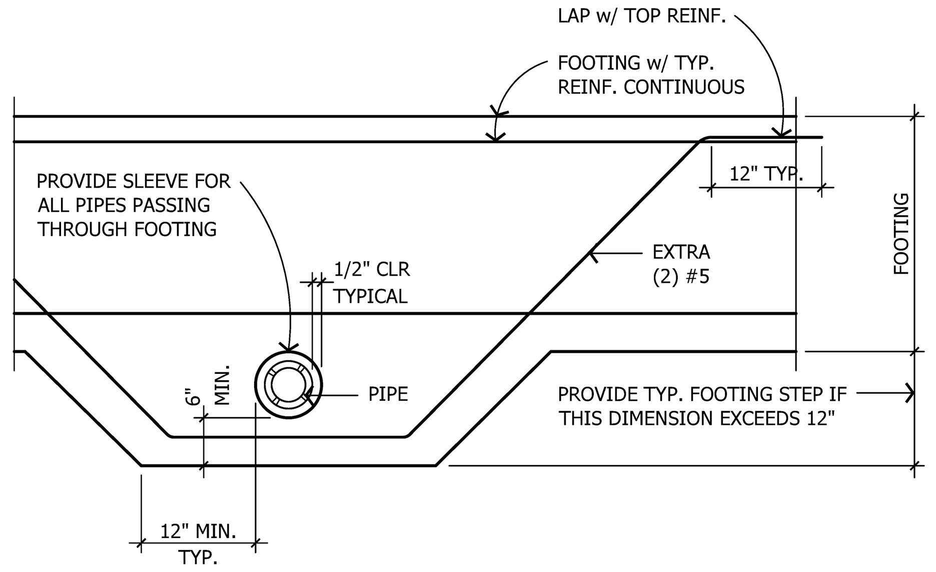

206A PIPE BELOW FOOTING

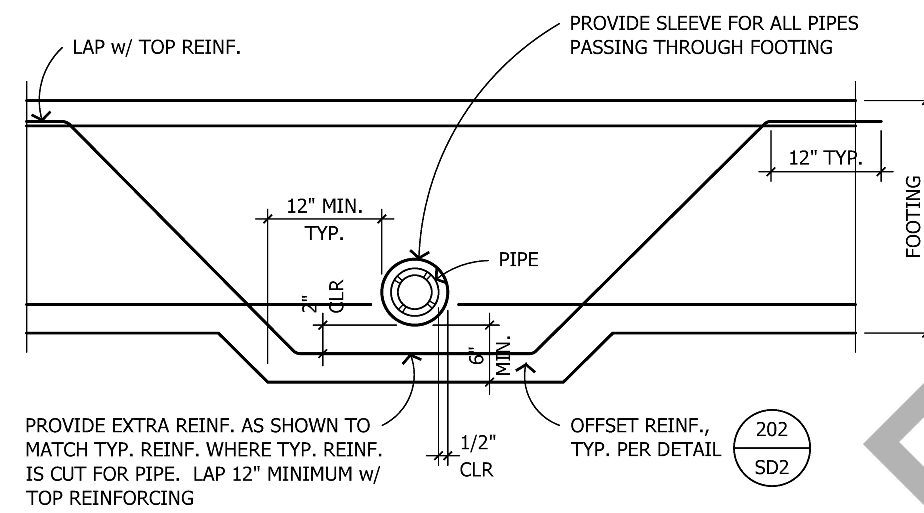

206B PIPE THROUGH FOOTING

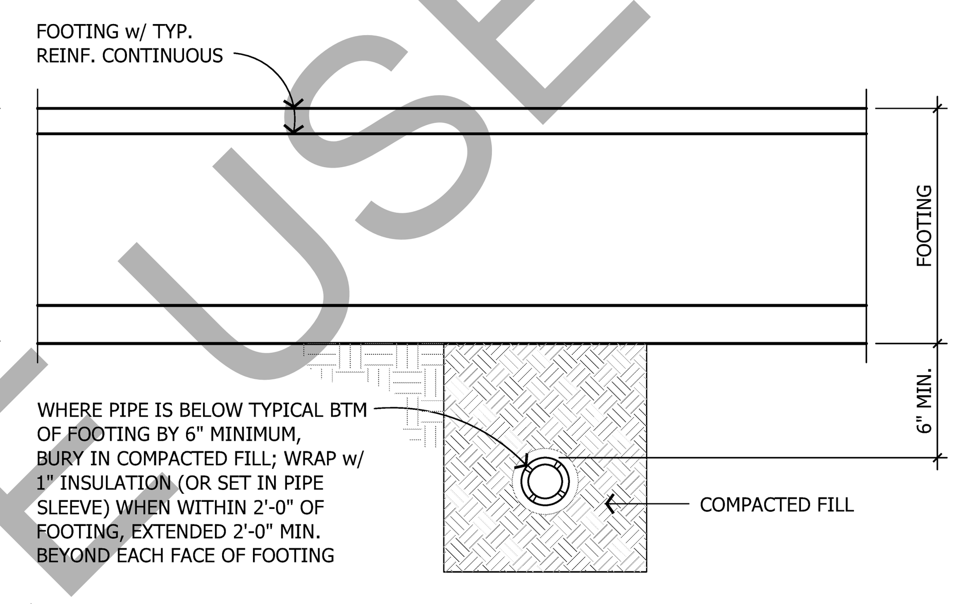

206C PIPE BELOW FOOTING

WHERE FOOTING NEED NOT BE DEEPENED

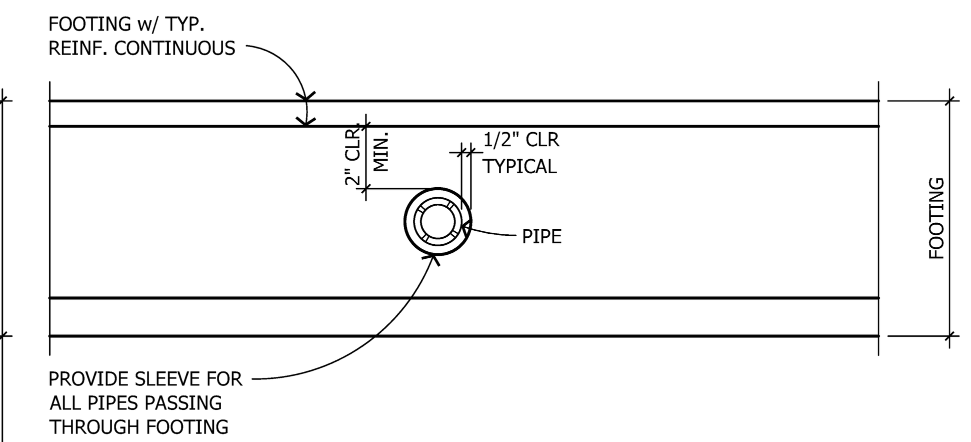

206D PIPE BETWEEN BARS

206 PIPE PERPENDICULAR TO FOOTING

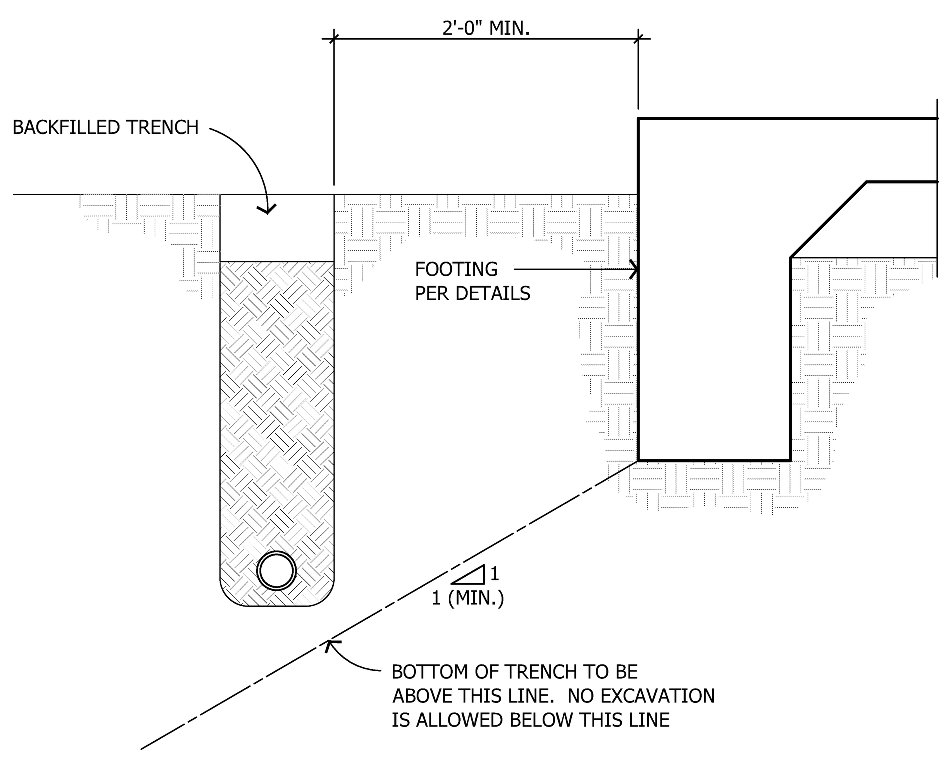

207 PIPE / TRENCH PARALLEL TO FOOTING

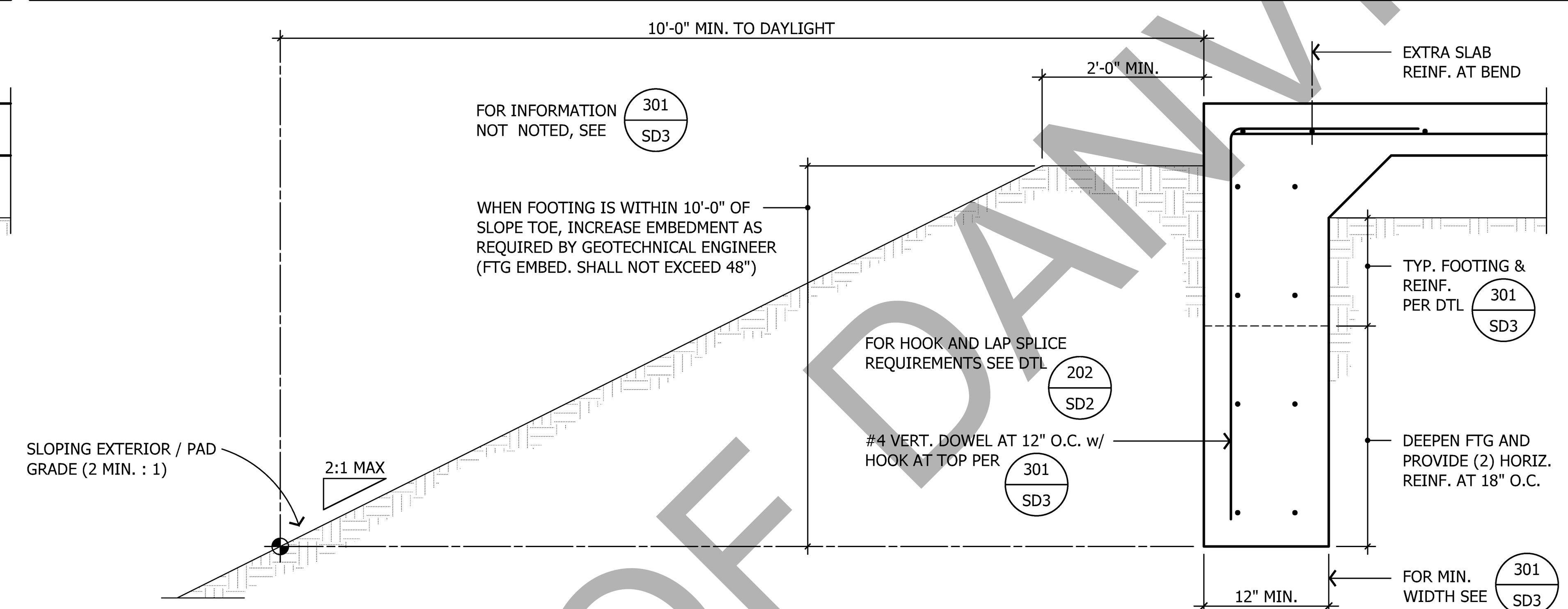

208 INCREASED FOOTING DEPTH BY SLOPE

DRILLED HOLE SCHEDULE

	TOP PLATE SIZE	MAX. HOLE SIZE SIZE WITHOUT TENSION STRAPS	MAX. HOLE * SIZE WITH TENSION STRAPS
EXT. OR INT. BRG WALL OR SHEARWALL	2x4	7/8" DIA.	2-1/4" DIA.
	2x6	2-7/8" DIA.	4-1/4" DIA.
INT. NON-STRUCTURAL PARTITION	2x4	2-1/8" DIA.	2-1/4" DIA.
	2x6	4-1/8" DIA.	4-1/4" DIA.

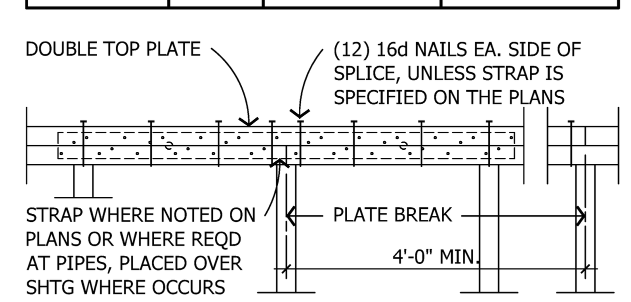

209A TYPICAL LAP SPLICE

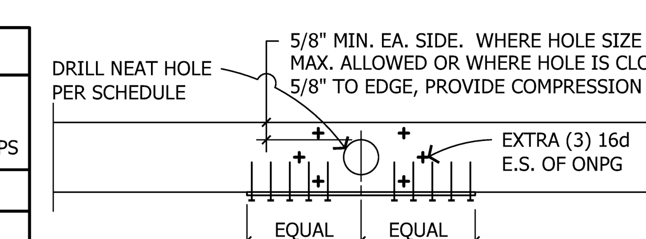

209D TENSION STRAP - PLAN VIEW

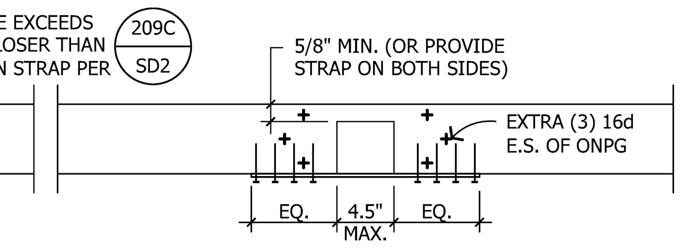

209E COMPRESSION STRAP - PLAN VIEW

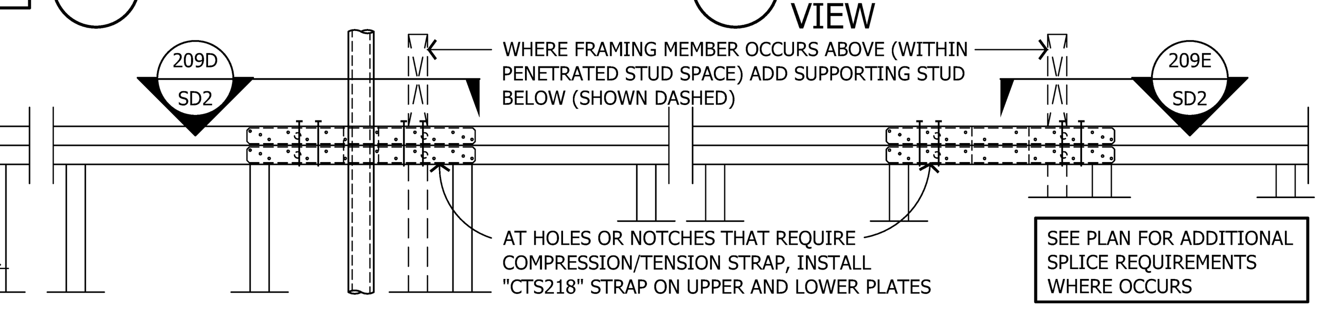

209B TENSION STRAP AT DRILLED HOLES

209C COMPRESSION STRAP AT NOTCHES

209 TOP PLATE SPLICES, BREAKS AND PENETRATIONS

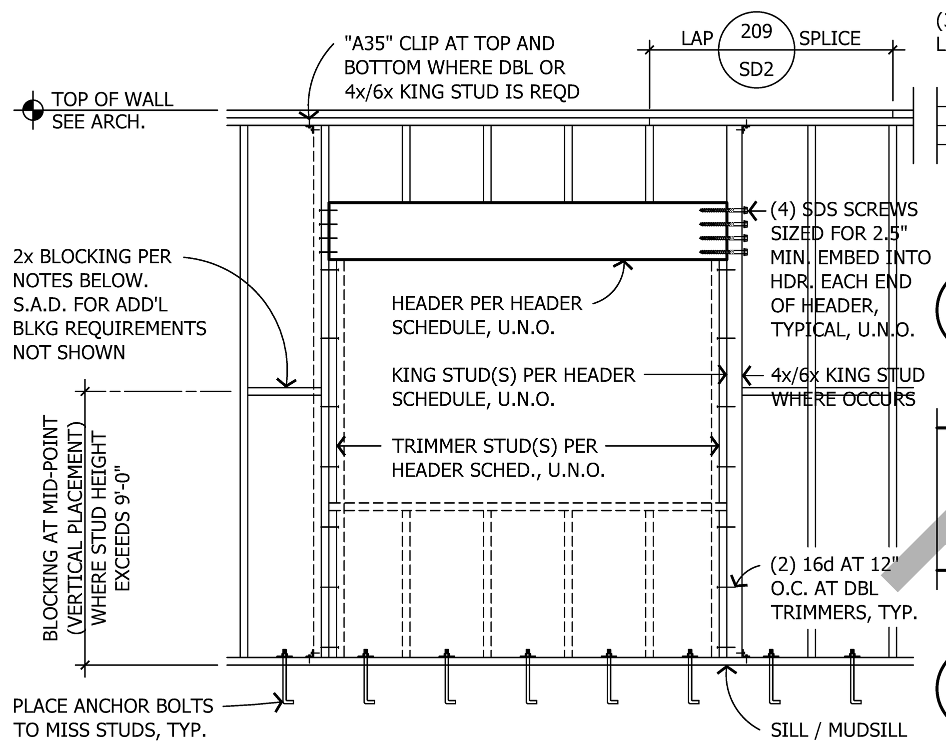

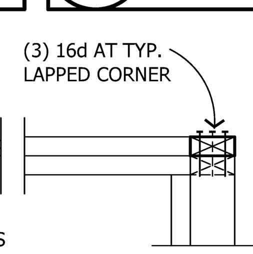

210A TOP PLATE CORNER LAP

SILL ANCHORS AND P.T. D.F. MUDSILLS

1. PLATES AND MUDSILLS SHALL BE BOLTED TO THE FOUNDATION WITH NOT LESS THAN 5/8" DIA. ANCHORS PER DTL. 201 SD2
2. ALL PLATES AND MUDSILLS IN CONTACT WITH CONCRETE OR MASONRY SHALL BE PRESSURE-TREATED PER NOTE 3 OF GENERAL FRAMING NOTES LOCATED ON SHEET SN2
3. PLAIN CARBON STEEL FASTENERS, INCLUDING NUTS AND WASHERS, IN CONTACT WITH SODIUM BORATE SBX/DOT PRESERVATIVE-TREATED WOOD IN AN INTERIOR, DRY ENVIRONMENT SHALL BE PERMITTED.

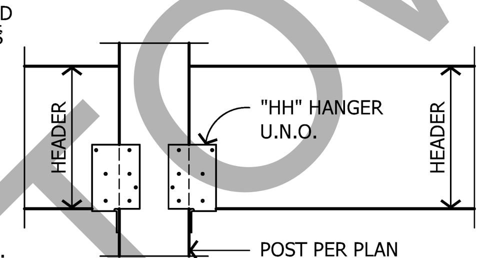

210B HEADER AT POST ELEVATION

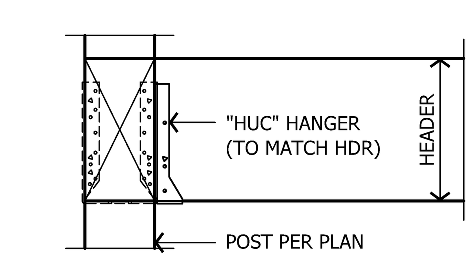

210C HEADER AT CORNER POST - ELEVATION

HEADER SCHEDULE - TYP. U.N.O. ON PLAN

MAX. ROUGH OPENING		3'-6"	4'-6"	5'-6"	6'-6"	8'-6"
BEARING (ROOF)	2x4 WALL	4x6 D.F. #2	4x8 D.F. #2	4x10 D.F. #2	4x10 D.F. #2	3.5 x 9.5 LVL
	2x6 WALL	6x6 D.F. #1	6x6 D.F. #1	6x8 D.F. #1	6x8 D.F. #1	6x10 D.F. #1
BEARING (FLOOR)	2x4 WALL	4x8 D.F. #2	4x10 D.F. #2	4x10 D.F. #2	3.5 x 9.5 LVL	3.5 x 9.5 LVL
	2x6 WALL	6x6 D.F. #1	6x8 D.F. #1	6x10 D.F. #1	6x10 D.F. #1	5.25 x 9.5 LVL
NON- BRG WALLS	2x4 WALL	4x4 D.F. #2	4x4 D.F. #2	4x4 D.F. #2	4x6 D.F. #2	4x8 D.F. #2
	2x6 WALL	4x6 (FLAT)	4x6 (FLAT)	4x6 (FLAT)	6x6 D.F. #1	6x6 D.F. #1

KING STUD SCHEDULE - TYP. U.N.O. ON PLAN

MAX. ROUGH OPENING			3'-6"	4'-6"	5'-6"	6'-6" [1]	8'-6" [1]
MAX. PLATE HEIGHT	8'-1"	2x4 WALL	(1) - 2x4	(2) - 2x4	(2) - 2x4	(2) - 2x4	(3) - 2x4
		2x6 WALL	(1) - 2x6	(2) - 2x6	(2) - 2x6	(2) - 2x6	(3) - 2x6
	9'-1"	2x4 WALL	(2) - 2x4	(2) - 2x4	(2) - 2x4	(3) - 2x4	(3) - 2x4
		2x6 WALL	(1) - 2x6	(2) - 2x6	(2) - 2x6	(2) - 2x6	(3) - 2x6
	10'-1"	2x4 WALL	(2) - 2x4	(2) - 2x4	(3) - 2x4	(4) - 2x4	(5) - 2x4
		2x6 WALL	(1) - 2x6	(2) - 2x6	(2) - 2x6	(2) - 2x6	(3) - 2x6

210D HEADER SCHEDULE - TYPICAL U.N.O. ON THE PLAN

NOTES

1. ALL ROUGH OPENINGS 6'-0" AND GREATER SHALL HAVE DOUBLE 2x TRIM STUDS PER SCHEDULE U.N.O. ON PLAN.
2. TRIM STUDS SHALL BE CONTINUOUS FROM BOTTOM OF HEADER TO THE TOP OF THE SILL PLATE BELOW.
3. STACK ALL KING AND TRIM STUDS FROM LEVEL AT WHICH THEY OCCUR CONTINUOUS DOWN TO SILL PLATE AT FOUNDATION LEVEL. PROVIDE SOLID FILLER IN JOIST SPACE.
4. USE 1-3/4" LSL FILLER OF MATCHING DEPTH TO SHIM TO WALL WIDTH.
5. ADD INSULATION TO HEADERS WHICH DO NOT MATCH WALL THICKNESS PER 210D SD2

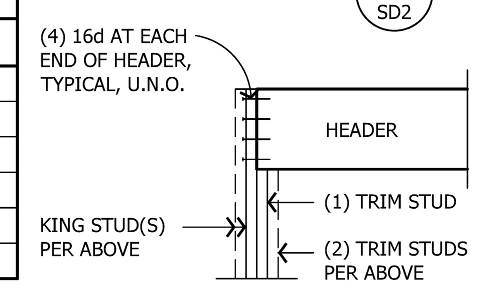

210E TRIM / KING STUDS

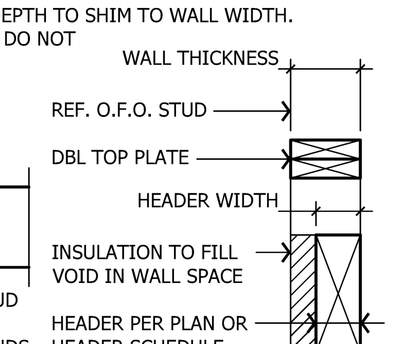

210F INSULATION AT HEADER

210 TYPICAL FRAMED WALL OPENING AND HEADER SCHEDULE

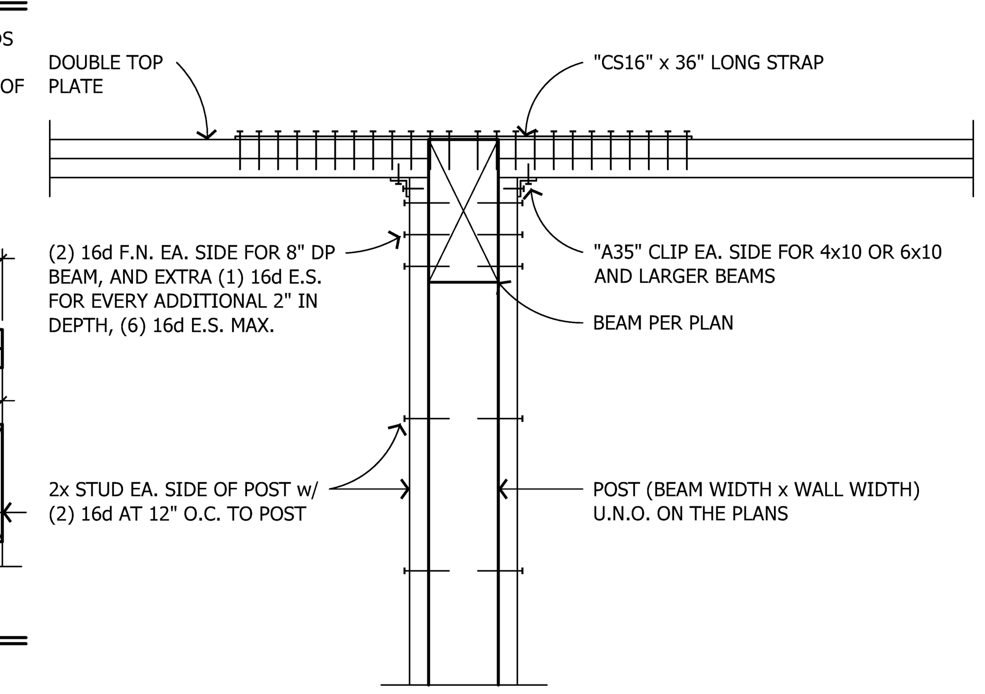

211 TYPICAL BEAM SUPPORT IN WALL

TOWN OF DANVILLE USE ONLY

ADVANCED ENGINEERING
3381 Walnut Blvd. Ste. 220
Brentwood, CA 94513
Office: 925.516.3502
Fax: 925.262.4662

THE DRAWINGS AND SPECIFICATIONS APPEARING HEREIN CONSTITUTE THE ORIGINAL WORK OF **DP ADVANCED ENGINEERING, INC.** AND SHALL BE CONSIDERED CONFIDENTIAL AND PROPRIETARY PROPERTY. COPYING OR REPRODUCING ANY PORTION OF THESE DOCUMENTS WITHOUT WRITTEN AUTHORIZATION IS STRICTLY PROHIBITED. THE CONTRACT DOCUMENTS WERE PREPARED FOR USE ON THIS SPECIFIC SITE IN CONJUNCTION WITH ITS ISSUE DATE AND ARE NOT SUITABLE FOR USE ON A DIFFERENT SITE OR AT A LATER TIME. USE OF THESE DRAWINGS FOR REFERENCE OR EXAMPLE ON ANOTHER PROJECT REQUIRES THE SERVICES OF A PROPERLY LICENSED ENGINEER. REPRODUCTION OF THE CONTRACT DOCUMENTS FOR REUSE ON ANOTHER PROJECT IS NOT AUTHORIZED.

TOWN OF DANVILLE
ACCESSORY DWELLING UNIT
MEDITERRANEAN
DANVILLE, CALIFORNIA

1
2
3
4
5
6

PLEASE NOTE THE REVISION NUMBER AND DATE ARE FOR STRUCTURAL SHEETS ONLY.

Engineering Seal:

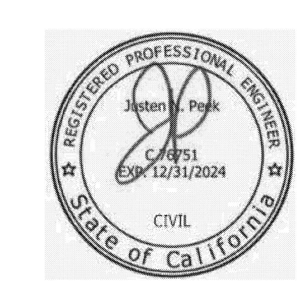

Sheet Description:
TYPICAL CONCRETE AND CARPENTRY DETAILS

No Scale

Initial Issue Date:	March 24, 2023
Drawn By:	E. Bennett
Project Designer:	J. Peek
Project Manager:	J. Peek Ext. 23
Job No.	W021420

Sheet No.
SD2

DO NOT SCALE THESE DRAWINGS

PLAN SET ID: S-ME-R-P

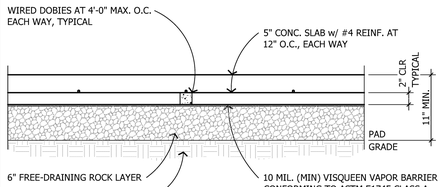

A TYPICAL SLAB-ON-GRADE SECTION

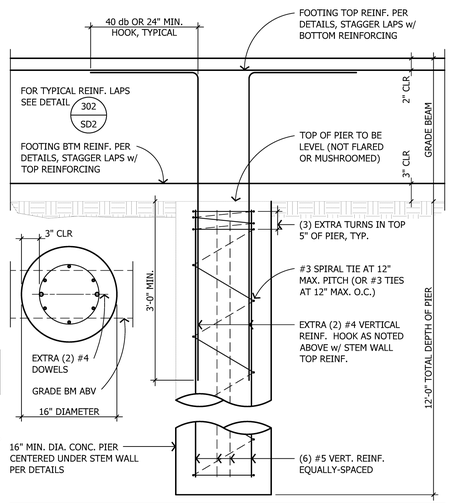

B TYPICAL FOOTING & PIER ELEVATION

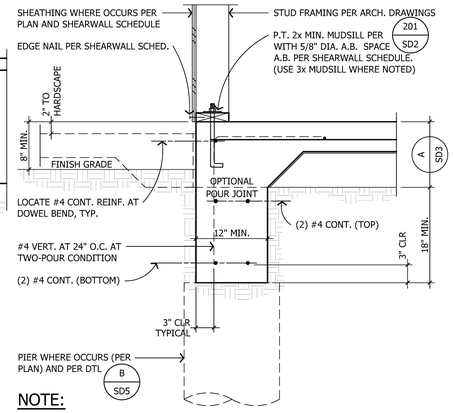

NOTE:

PLAIN CARBON STEEL FASTENERS IN SEA/DOT AND ZINC BORATE PRESERVATIVE-TREATED LUMBER SHALL BE PERMITTED. TYP. ALL DETAILS.

301 TYPICAL PERIMETER FOOTING

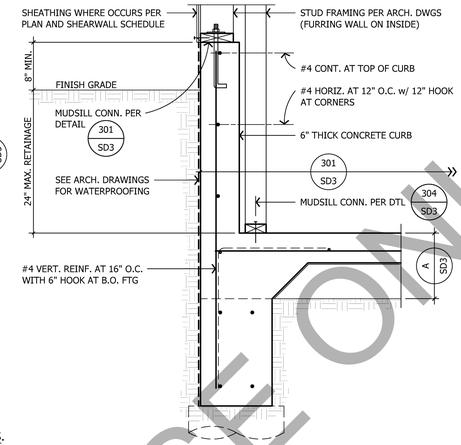

301A RAISED CONC. CURB AT HIGH GRADE COND.

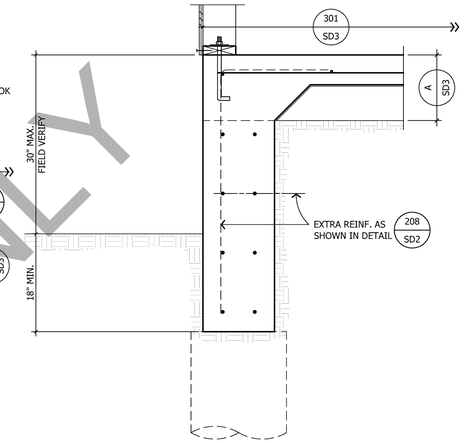

301B DEEPENED FOOTING AT LOW GRADE COND.

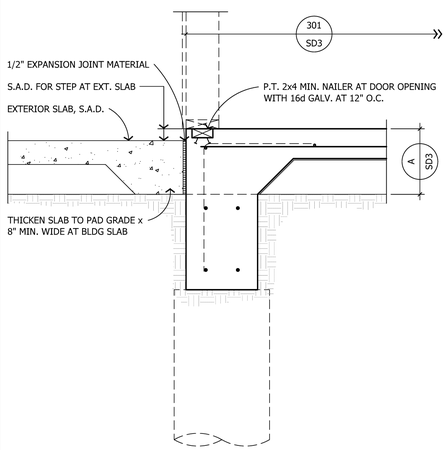

302 EMBEDDED NAILER AT DOORWAY

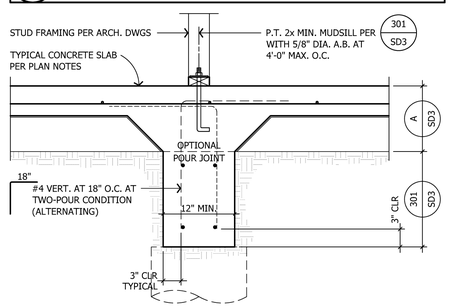

303 TYPICAL INTERIOR FOOTING

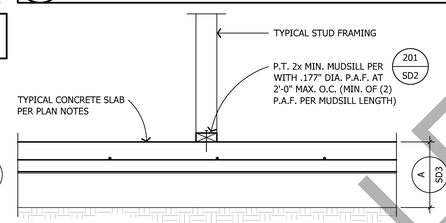

304 NON BRG / NON-SHEARWALL TO SLAB

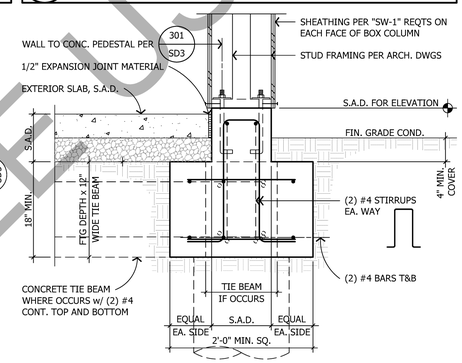

305 PORCH STUD COLUMN AND FOOTING

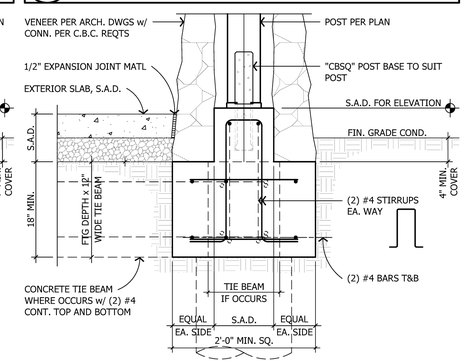

306 PORCH STUD COLUMN AND FOOTING

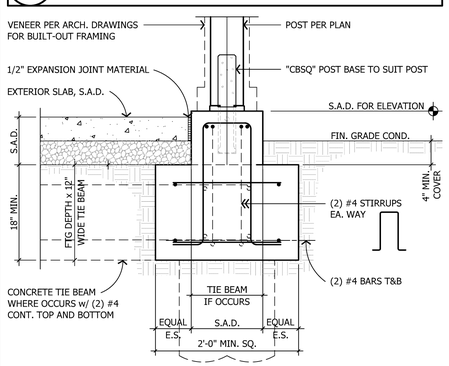

307 PORCH STUD COLUMN AND FOOTING

TOWN OF DANVILLE
FOR REVIEW AND COMMENT ONLY

ADVANCED ENGINEERING
3381 Walnut Blvd. Ste. 220
Brentwood, CA 94513
Office: 925.516.3502
Fax: 925.262.4662

THE DRAWINGS AND SPECIFICATIONS APPEARING HEREIN CONSTITUTE THE ORIGINAL WORK OF **DP ADVANCED ENGINEERING, INC.** AND SHALL BE CONSIDERED CONFIDENTIAL AND PROPRIETARY PROPERTY. COPYING OR REPRODUCING ANY PORTION OF THESE DOCUMENTS WITHOUT WRITTEN AUTHORIZATION IS STRICTLY PROHIBITED. THE CONTRACT DOCUMENTS WERE PREPARED FOR USE ON THIS SPECIFIC SITE IN CONJUNCTION WITH ITS ISSUE DATE AND ARE NOT SUITABLE FOR USE ON A DIFFERENT SITE OR AT A LATER TIME. USE OF THESE DRAWINGS FOR REFERENCE OR EXAMPLE ON ANOTHER PROJECT REQUIRES THE SERVICES OF A PROPERLY LICENSED ENGINEER. REPRODUCTION OF THE CONTRACT DOCUMENTS FOR REUSE ON ANOTHER PROJECT IS NOT AUTHORIZED.

TOWN OF DANVILLE
ACCESSORY DWELLING UNIT
MEDITERRANEAN

DANVILLE, CALIFORNIA

1
2
3
4
5
6

PLEASE NOTE THE REVISION NUMBER AND DATE ARE FOR STRUCTURAL SHEETS ONLY.

Engineering Seal:

Sheet Description:
FOUNDATION DETAILS
SLAB ON GRADE w/ PIERS

Scale: 1" = 1'-0"

Initial Issue Date:	March 24, 2023
Drawn By:	E. Bennett
Project Designer:	J. Peek
Project Manager:	J. Peek Ext. 23
Job No.	W021420
Sheet No.	SD3

DO NOT SCALE THESE DRAWINGS
PLAN SET ID: S-ME-R-P

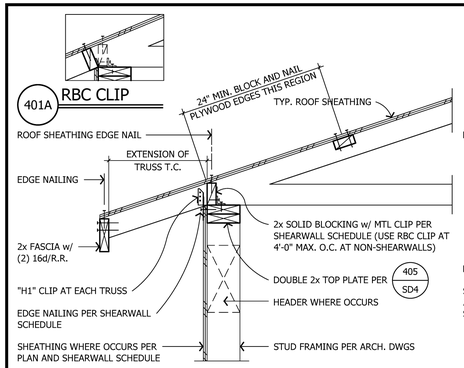

401 TRUSS PERPEND. TO EXTERIOR WALL

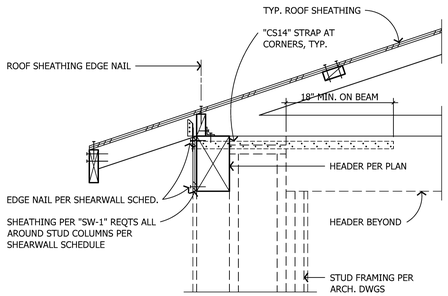

402 TRUSS PERPEND. TO PORCH BEAM

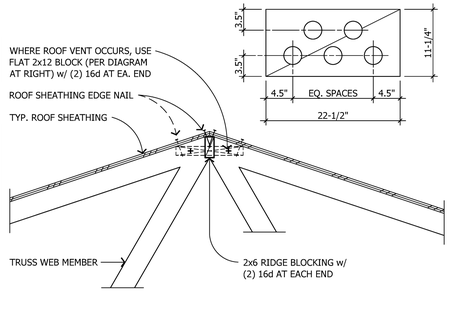

403 RIDGE BLOCKING AT ROOF TRUSSES

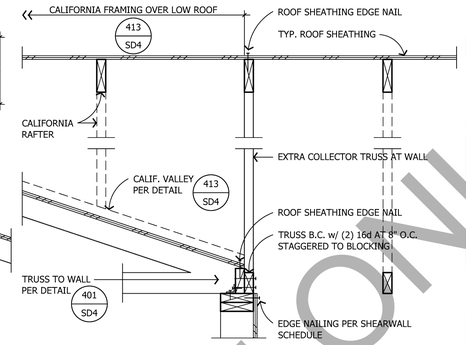

404 TRUSS TO INTERIOR BEARING WALL

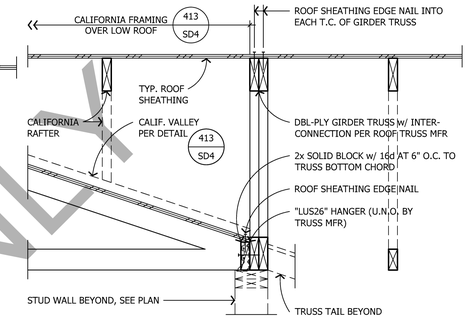

405 TRUSS TO GIRDER TRUSS

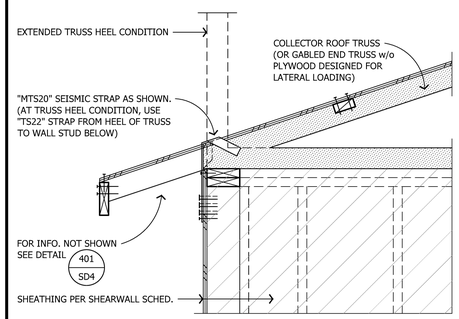

TYPICAL AT ENDS OF COLLECTOR AND GABLED END TRUSSES WHERE SHEARWALL SHEATHING DOES NOT EXTEND UP TO TOP CHORD.

406 COLLECTOR TRUSS UPLIFT ANCHORAGE

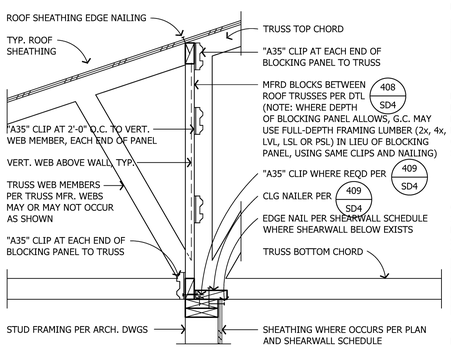

407 TRUSS TO INTERIOR SHEAR WALL

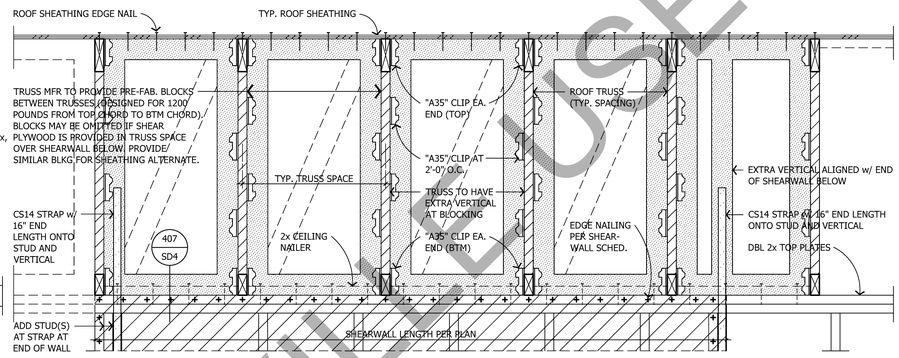

408 FABRICATED TRUSS BLOCKING PANEL ELEVATION ABOVE SHEARWALL

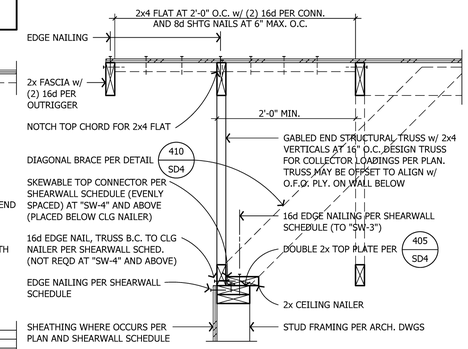

409 GABLED END TRUSS

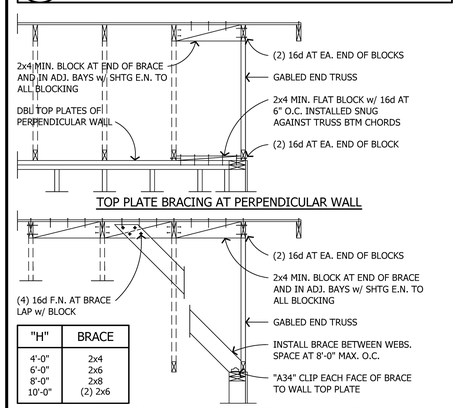

"H"	BRACE
4'-0" 6'-0" 8'-0" 10'-0"	2x4 2x6 2x8 (2) 2x6

410 GABLE END TRUSS BRACING

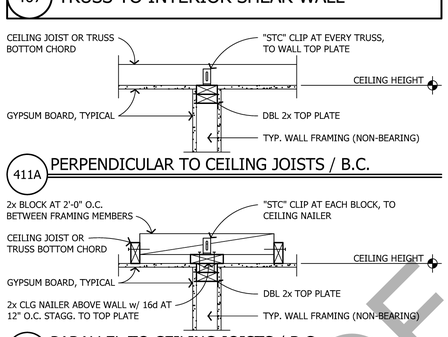

411A PERPENDICULAR TO CEILING JOISTS / B.C.

411B PARALLEL TO CEILING JOISTS / B.C.

411 INTERIOR NON-BEARING WALL TO TRUSS

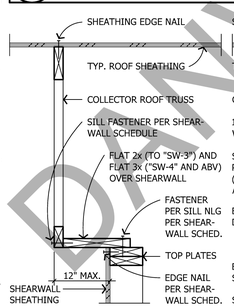

412A OFFSET SHEARWALL

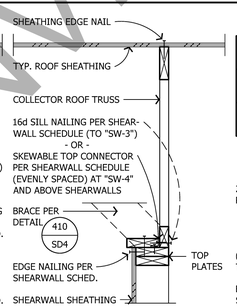

412B ALIGNED SHEARWALL

412 PARALLEL TRUSS TO INTERIOR SHEARWALL

CALIFORNIA MEMBER	MAX. SPAN (PONYWALL SPACING)	DESIGN LOAD FOR SUPPORT FRAMING
2x4 AT 24" O.C.	6'-0"	180 plf
2x6 AT 24" O.C.	10'-0"	300 plf

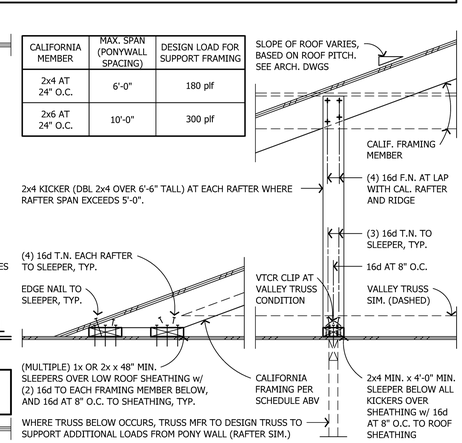

413 CALIFORNIA FRAMING DETAIL

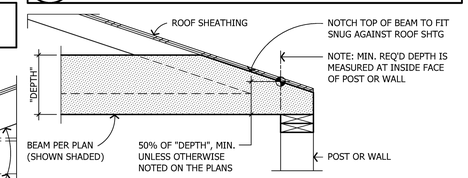

414 SHAPED TOP OF BEAM AT EAVE

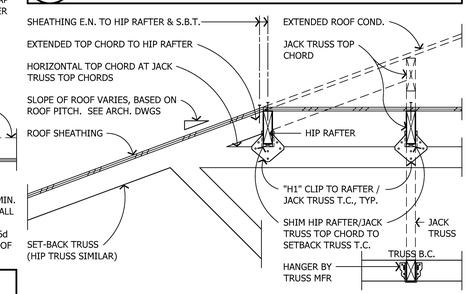

419 CONNECTION AT SET-BACK TRUSS

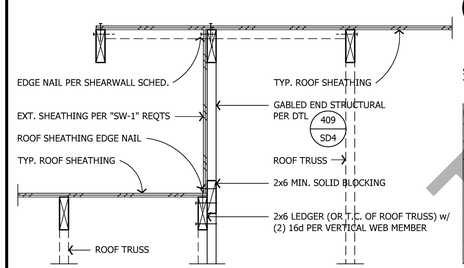

415 ROOF STEP

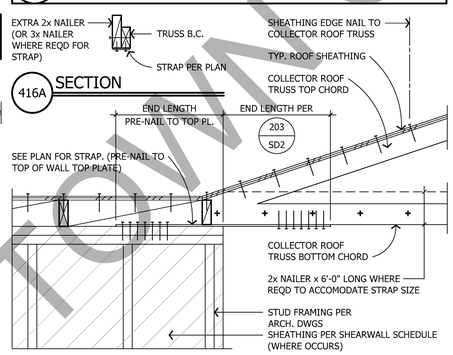

416 HORIZONTAL STRAP TO WALL TOP PLATE

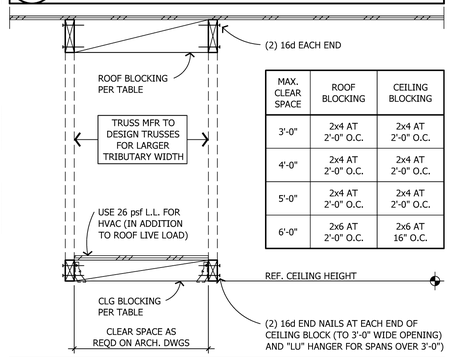

MAX. CLEAR SPACE	ROOF BLOCKING	CEILING BLOCKING
3'-0"	2x4 AT 2'-0" O.C.	2x4 AT 2'-0" O.C.
4'-0"	2x4 AT 2'-0" O.C.	2x4 AT 2'-0" O.C.
5'-0"	2x4 AT 2'-0" O.C.	2x4 AT 2'-0" O.C.
6'-0"	2x6 AT 2'-0" O.C.	2x6 AT 16" O.C.

417 ROOF TRUSSES AT HVAC / ATTIC ACCESS

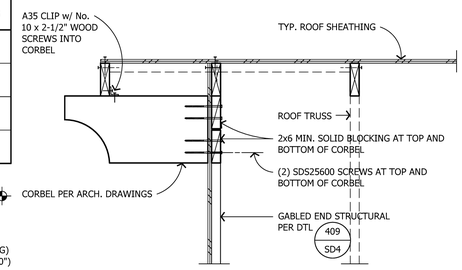

418 CORBEL BEAM AT GABLED END TRUSS

TOWN OF DANVILLE
WILL NOT BE USED FOR
ADVANCED ENGINEERING

ADVANCED ENGINEERING
3381 Walnut Blvd. Ste. 220
Brentwood, CA 94513
Office: 925.516.3502
Fax: 925.262.4662

THE DRAWINGS AND SPECIFICATIONS APPEARING HEREIN CONSTITUTE THE ORIGINAL WORK OF **DP ADVANCED ENGINEERING, INC.** AND SHALL BE CONSIDERED CONFIDENTIAL AND PROPRIETARY PROPERTY. COPYING OR REPRODUCING ANY PORTION OF THESE DOCUMENTS WITHOUT WRITTEN AUTHORIZATION IS STRICTLY PROHIBITED. THE CONTRACT DOCUMENTS WERE PREPARED FOR USE ON THIS SPECIFIC SITE IN CONJUNCTION WITH ITS ISSUE DATE AND ARE NOT SUITABLE FOR USE ON A DIFFERENT SITE OR AT A LATER TIME. USE OF THESE DRAWINGS FOR REFERENCE OR EXAMPLE ON ANOTHER PROJECT REQUIRES THE SERVICES OF A PROPERLY LICENSED ENGINEER. REPRODUCTION OF THE CONTRACT DOCUMENTS FOR REUSE ON ANOTHER PROJECT IS NOT AUTHORIZED.

TOWN OF DANVILLE
ACCESSORY DWELLING UNIT MEDITERRANEAN

DANVILLE, CALIFORNIA

1	
2	
3	
4	
5	
6	

PLEASE NOTE THE REVISION NUMBER AND DATE ARE FOR STRUCTURAL SHEETS ONLY.

Engineering Seal:

REGISTERED PROFESSIONAL ENGINEER
Jason J. Peek
C46751
Exp. 12/31/2024
CIVIL
State of California

Sheet Description:
ROOF FRAMING DETAILS

Scale: 1" = 1'-0"

Initial Issue Date:	March 24, 2023
Drawn By:	E. Bennett
Project Designer:	J. Peek
Project Manager:	J. Peek Ext. 23
Job No.	W021420
Sheet No.	SD4

DO NOT SCALE THESE DRAWINGS
PLAN SET ID: S-ME-R-P

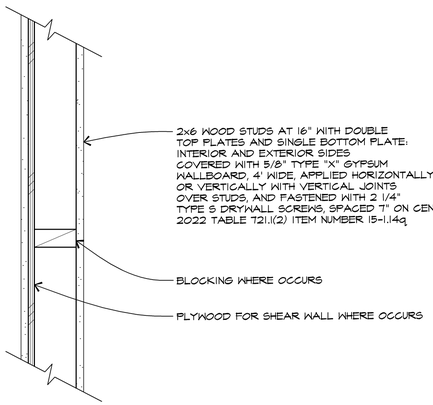

1 / A1 1 HOUR FIRE RATED WALL DETAIL

NOTES:

1) ALL NEW EXTERIOR WALLS TO BE 2x6 FRAMED STUD WALLS.
2) WINDOWS MARKED W/ (T) SHALL BE TEMPERED SAFETY GLASS.
3) ALL WINDOW HEAD HTS. SHALL BE 8'-0" TYP., U.N.O.
4) ALL WINDOWS MARKED "EGRESS" SHALL MEET MIN. EMERGENCY EGRESS WINDOW STANDARDS OF MIN. NET CLEAR OPENING OF 5.7 SQ. FT. & MIN. NET CLEAR HEIGHT OF 24" & MIN. NET CLEAR WIDTH OF 34" CONTRACTOR SHALL VERIFY W/ WINDOW MANUFACTURE.
5) THERE MUST BE AT LEAST 15" INCHES BETWEEN THE CENTER OF PLUMBING FIXTURES SUCH AS WATER CLOSETS OR SINKS AND THE NEAREST WALL OR OBJECT.
5) CONTRACTOR SHALL VERIFY LOCATION & NUMBER OF A/C UNITS W/ OWNER PROVIDE 4" CONC. SLAB W/ #10 W.W.M. ALL NECESSARY PLUMBING & ELECTRICAL.
6) MINIMUM OF 36-INCH DEEP LANDING IS REQUIRED IN DIRECTION OF TRAVEL. MAXIMUM RISE OF STEP IS 7.75-INCH.
7) BATHTUB AND SHOWER FLOORS AND WALLS ABOVE BATHTUBS WITH INSTALLED SHOWER HEADS AND IN SHOWER COMPARTMENTS SHALL BE FINISHED WITH NONABSORBENT SURFACE. SUCH WALL SURFACES SHALL EXTEND TO A HEIGHT OF NOT LESS THAN 6 FEET ABOVE THE FLOOR. CRC R307.2.
8) GYPSUM BOARD SHALL NOT BE USED WHERE THERE WILL BE DIRECT EXPOSURE TO WATER, OR IN AREAS SUBJECT TO CONTINUOUS HIGH HUMIDITY. CRC 702.3.7.

EGRESS WINDOW DETAIL

EGRESS WINDOWS SHALL COMPLY W/ ALL 4 CONDITIONS ILLUSTRATED BELOW.

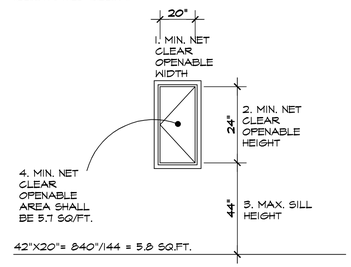

ESCAPE OR RESCUE WINDOWS SHALL HAVE A MINIMUM NET CLEAR OPENABLE AREA OF 5.7 SQ/FT. (0.53 M ^{2}). (EXCEPTION: THE MINIMUM NET CLEAR OPENING FOR EMERGENCY ESCAPE AND RESCUE GRADE-FLOOR OPENINGS OPENINGS SHALL BE 5 SQUARE FEET (0.46M)^2. THE MINIMUM NET CLEAR OPENABLE HEIGHT DIMENSION SHALL BE 24 INCHES (610 MM). THE MINIMUM NET CLEAR OPENABLE WIDTH DIMENSION SHALL BE 20 INCHES (508 MM). THE NET CLEAR OPENINGS DIMENSIONS SHALL BE THE RESULT OF NORMAL OPERATION OF THE OPENING WHEN WINDOWS ARE PROVIDED AS A MEANS OF ESCAPE OR RESCUE, THEY SHALL HAVE A FINISHED SILL HEIGHT NOT MORE THAN 44 INCHES (1118 MM) ABOVE THE FLOOR. CRC SECTION R310.1, R310.1.1, R310.1.2., R310.1.3. AND R310.1.4.

CONTRACTOR NOTE:CONTRACTOR SHALL BE RESPONSIBLE FOR COMPLIANCE WITH ALL EGRESS REQUIREMENTS.

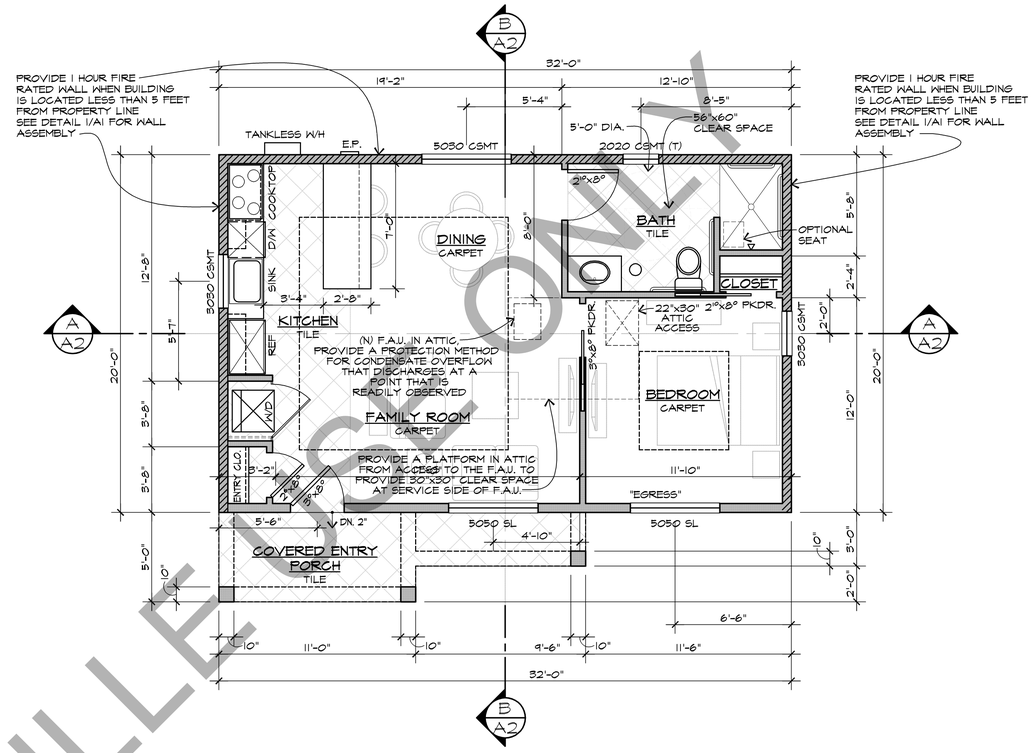

FLOOR PLAN (STUDIO) (MEDITERRANEAN STYLE)

SCALE: ¼" = 1'-0"

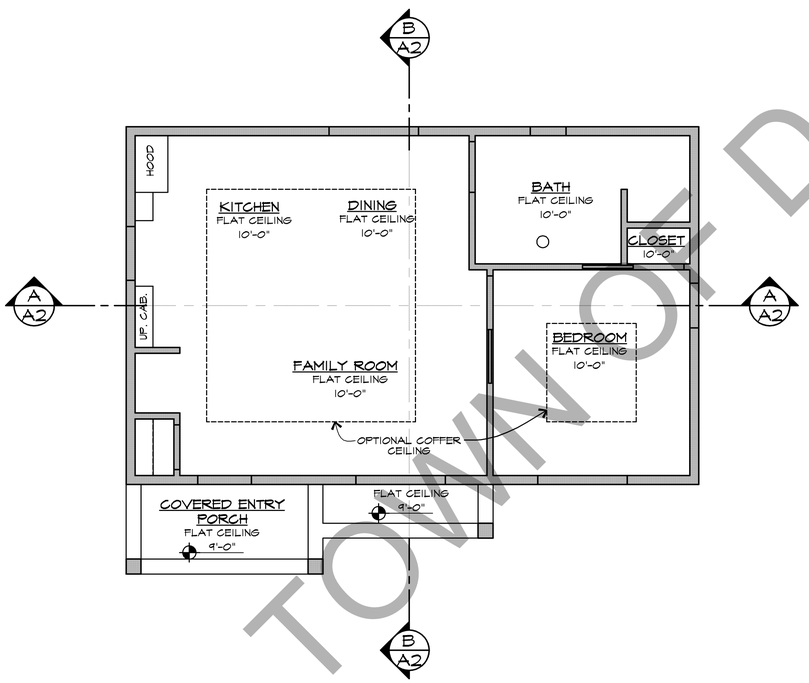

REFLECTED CEILING PLAN

SCALE: ¼" = 1'-0"

VENTILATION CALCULATIONS

AREA 1

* ATTIC AREA: 724 SQ. FT.
* REQUIRED AREA: (CONVERTED TO INCHES @ 1/300) 347.5 SQ. IN.
* UPPER AREA: (50% REQUIRED IN UPPER 1/3) 173.75 SQ. IN.
* PROVIDE 173.75 SQ.IN. IN UPPER 1/3 OFF ROOF WITH O'HAGIN'S "FLAT" VENT (98.75 SQ. IN. FREE AREA)
  * 2 VENTS REQUIRED
* LOWER AREA: (50% REQUIRED IN LOWER 1/3) 173.75 SQ. IN.
* TO BE PROVIDED BY 25 VENTED FRIEZE BLOCKS MIN. (7 SQ. IN. FREE VENTING PER BLOCK VIA 3-2" DIA. HOLES)

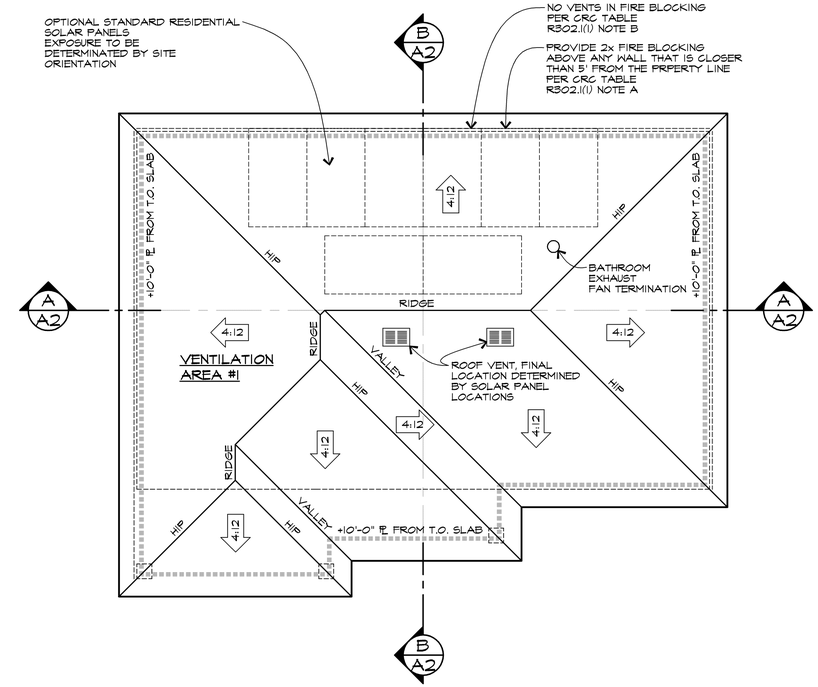

ROOF PLAN

SCALE: ¼" = 1'-0"

TOWN OF DANVILLE USE ONLY

REVISIONS	DATE

LICENSED ARCHITECT WILLIAM A. WOOD C 13874 Jan. 31, 2025 REN. DATE STATE OF CALIFORNIA

DANVILLE ACCESSORY DWELLING UNITS - STUDIO

DANVILLE CA 94526

WILLIAM WOOD ARCHITECTS
301 HARTZ AVENUE, SUITE 203
DANVILLE, CALIFORNIA 94526
(925) 820-8233

THIS IS AN ORIGINAL, UNPUBLISHED WORK, AND MAY NOT BE DUPLICATED, PUBLISHED, OR OTHERWISE USED WITHOUT WRITTEN CONSENT OF WILLIAM WOOD ARCHITECTS.

COPYRIGHT © WILLIAM WOOD ARCHITECTS, 2023

DRAWN	JJ
CHECKED	WW
DATE	03-30-23
SCALE	AS SHOWN
JOB NO.	20.921R
SHEET	A2
OF	SHEETS

Apr 26, 2023 - 4:07pm A2 Studio Mediterranean style.dwg

PLAN SET ID: S-ME-R-P

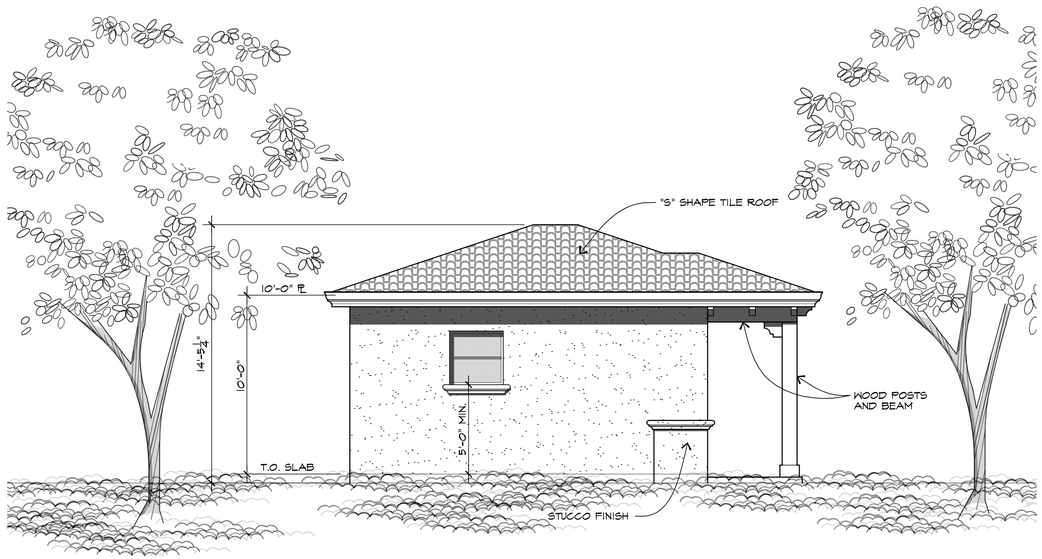

LEFT ELEVATION (MEDITERRANEAN STYLE)

SCALE: ¼" = 1'-0"

FRONT ELEVATION (MEDITERRANEAN STYLE)

SCALE: ¼" = 1'-0"

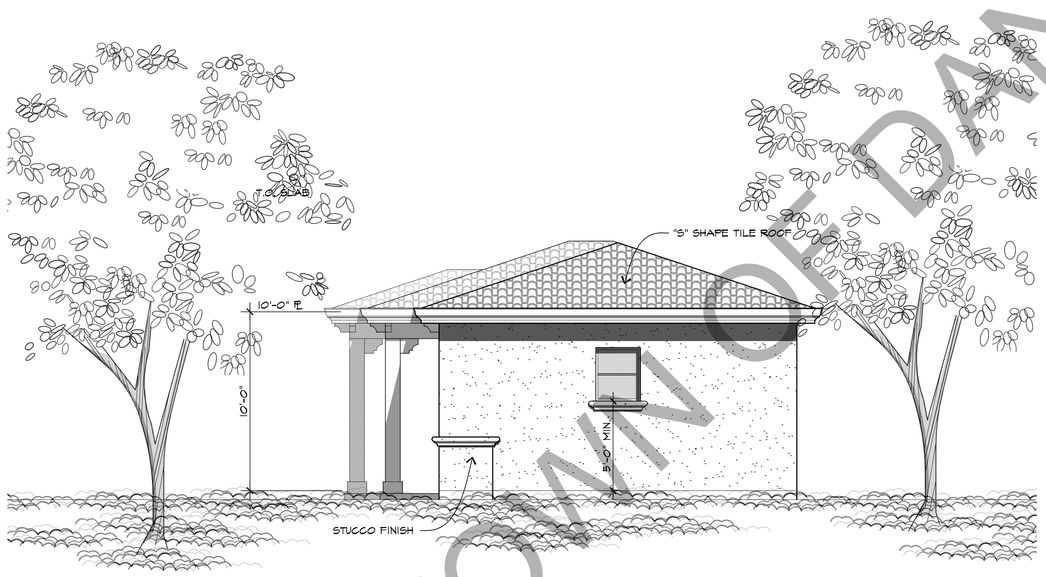

RIGHT ELEVATION (MEDITERRANEAN STYLE)

SCALE: ¼" = 1'-0"

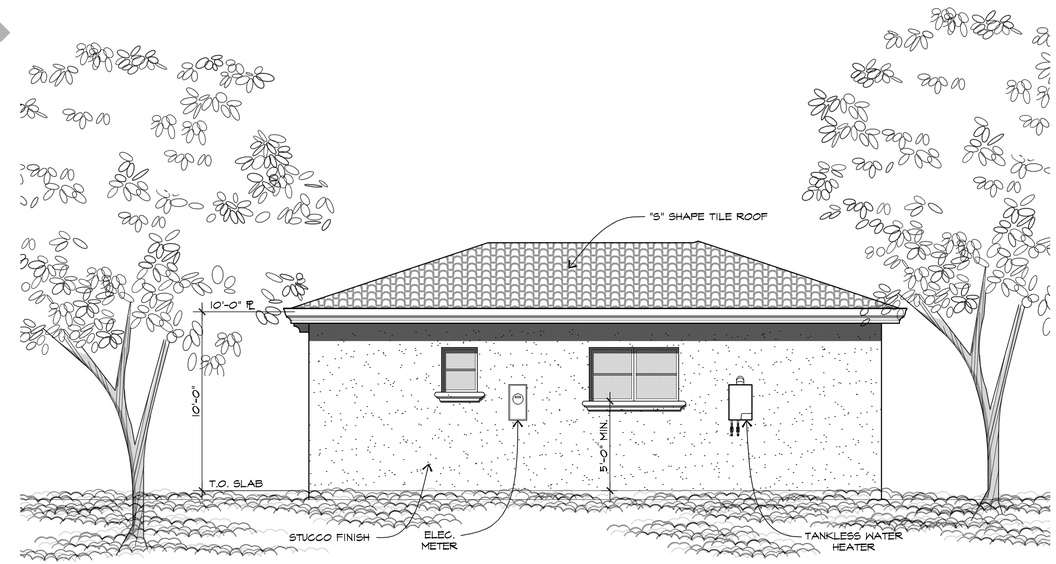

REAR ELEVATION (MEDITERRANEAN STYLE)

SCALE: ¼" = 1'-0"

TOWN OF DANVILLE USE ONLY

	REVISIONS	DATE
△		
△		
△		
△		
△		
△		
△		

LICENSED ARCHITECT
WILLIAM A. WOOD
C 13874
Jan. 31, 2025
REN. DATE
STATE OF CALIFORNIA

DANVILLE ACCESSORY DWELLING UNITS - STUDIO

DANVILLE CA 94526

WILLIAM WOOD
ARCHITECTS
301 HARTZ AVENUE, SUITE 203
DANVILLE, CALIFORNIA 94526
(925) 820-8233

THIS IS AN ORIGINAL, UNPUBLISHED WORK, AND MAY NOT BE DUPLICATED, PUBLISHED, OR OTHERWISE USED WITHOUT WRITTEN CONSENT OF WILLIAM WOOD ARCHITECTS.

COPYRIGHT © WILLIAM WOOD ARCHITECTS, 2023

DRAWN	JJ
CHECKED	WW
DATE	03-30-23
SCALE	AS SHOWN
JOB NO.	20.921R
SHEET	A3
OF	SHEETS

Apr 26, 2023 - 4:07pm A3 Studio Mediterranean style.dwg

PLAN SET ID: S-ME-R-P

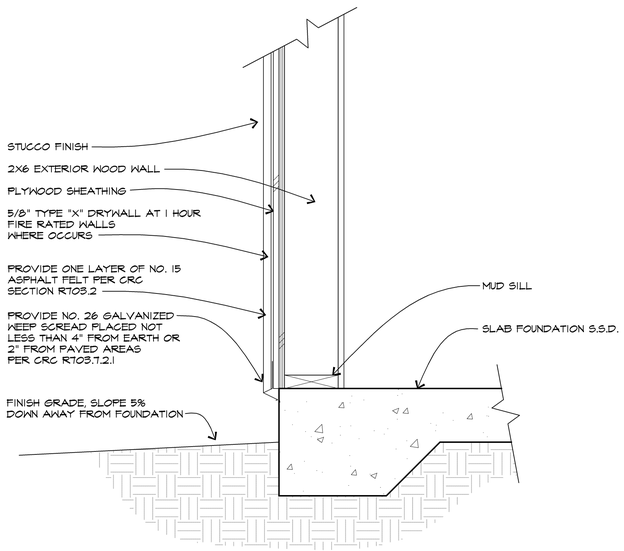

TYPICAL WALL DETAIL

SCALE: 1 1/2" = 1'-0"

ELECTRICAL/MECHANICAL KEY

- SWITCHED RECEPTACLE OUTLET @ 12" U.N.O.
- AFCI — DUPLEX RECEPTACLE OUTLET @ 12" U.N.O. W/ ARC-FAULT CIRCUIT INTERRUPTER
- GFCI — DUPLEX RECEPTACLE OUTLET W/ GROUND FAULT CIRCUIT INTERRUPTER
- WP — WEATHER PROOF DUPLEX RECEPTACLE OUTLET (GFCI PROTECTED PER NEC210-8(a)3)
- 220 — DUPLEX RECEPTACLE OUTLET - 220 VOLT
- $ — SINGLE POLE SWITCH @ 48" U.N.O.
- $3 — THREE-WAY SWITCH
- $D — SWITCH W/ DIMMER
- $M — SWITCH W/ MOTION LIGHT
- M — MOTION SENSOR
- CEILING MOUNTED LIGHT FIXTURE
- WALL MOUNTED LIGHT FIXTURE
- WP — WALL MOUNTED LIGHT FIXTURE - SHALL BE SUITABLE FOR DAMP LOCATIONS
- HANGING LIGHT
- RECESSED LED CEILING LIGHT FIXTURE
- RECESSED LED LOW VOLTAGE CEILING LIGHT
- WP — RECESSED LIGHT FIXTURE - SHALL BE LABELED SUITABLE FOR DAMP LOCATIONS
- EXHAUST FAN
- SD — SMOKE DETECTOR - (110V W/ BATTERY BACK-UP) HARD WIRED & INTERCONNECTED
- CD — CARBON MONOXIDE DETECTOR - (110V W/ BATTERY BACK-UP) HARD WIRED & INTERCONNECTED
- TELEVISION OUTLET
- HOSE BIBB (1/2"CW) W/ NON- REMOVABLE ANTI-SIPHON DEVICE (FOR OUTSIDE BIBB)
- G — GAS OUTLET
- T — THERMOSTAT
- C.A. — CEILING SUPPLY AIR REGISTER
- F.A. — FLOOR AIR SUPPLY REGISTER
- R.A. — COLD AIR RETURN @ CEILING

ELECTRICAL NOTES

1) THERMOSTAT LOCATION TO BE DETERMINED BY HVAC DESIGNER.
2) CEILING AIR REGISTERS TO BE DETERMINED BY HVAC DESIGNER.
3) KITCHEN & BATHROOM LIGHTING SHALL MEET EFFICIENCY REQUIREMENT OF 2022 TITLE 24.
4) CONTRACTOR TO PROVIDE A COLD WATER CONNECTION @ THE REFRIGERATOR
5 CONTRACTOR TO PROVIDE THE OPTION OF GAS OR 220V @ THE COOK TOP (VERIFY W/ OWNER)
6) WATER CLOSETS TO BE MAX 1.28 GALLONS PER FLUSH PER CAL GREEN SECTION 4.303.1.1.
7) INSTALLATION INSTRUCTIONS FOR ALL EQUIP. SHALL BE PROVIDED TO THE FIELD INSPECTOR @ THE TIME OF INSPECTION.
8) PROVIDE TWO SMALL APPLIANCE BRANCH CIRCUITS FOR THE KITCHEN AND ARE LIMITED TO SUPPLYING WALL AND COUNTER SPACE OUTLETS FOR THE KITCHEN, PANTRY, BREAKFAST ROOM, DINING ROOM, OR SIMILAR AREAS. NOTE: THESE CIRCUITS CANNOT SERVE OUTSIDE PLUGS, RANGE HOOD, DISPOSALS, DISHWASHERS OR MICROWAVES-ONLY THE REQUIRED COUNTERTOP/WALL OUTLETS INCLUDING THE REFRIGERATOR.
9) PROVIDE A DEDICATED 20-AMP BRANCH CIRCUIT TO SUPPLY THE LAUNDRY RECEPTACLE OUTLET.
10) PROVIDE AN ARC-FAULT CIRCUIT INTERRUPTER TO PROTECT ALL RECEPTACLES IN THE BEDROOMS.
11) PROVIDE RECEPTACLE OUTLETS IN FOLLOWING LOCATIONS:
A. AT EACH KITCHEN AND DINING AREA COUNTER SPACE WIDER THAN 12" LOCATED SO THAT NO POINT ALONG THE COUNTER WALL IS OVER 24" FROM A RECEPTACLE.
B. AN EXTERIOR RECEPTACLES AT THE FRONT AND REAR OF THE HOME. THEY MUST BE WITHIN 6 FEET, 6 INCHES OF GRADE AND WATERPROOF.
C. ONE RECEPTACLE FOR THE LAUNDRY, (I.E.,WASHER).
D. IN ANY HALLWAY 10 FT OR MORE IN LENGTH.
12) KITCHEN COUNTERTOP RECEPTACLES SHALL BE LOCATED ABOVE THE COUNTERTOP NOT MORE THAN 18", AND MAY NOT BE INSTALLED FACE-UP IN THE COUNTER.
13) ALL LIGHT FIXTURE IN TUB OR SHOWER ENCLOSURES SHALL BE LABEL "SUITABLE FOR DAMP LOCATIONS" AND IF CEILING HEIGHT IS => 8 FT. BE PROTECTED BY GFCI.
14) AN APPROVED CARBON MONOXIDE ALARM SHALL BE INSTALLED IN DWELLING UNITS AND IN SLEEPING UNITS WITHIN WHICH FUEL-BURNING APPLIANCES ARE INSTALLED. CARBON MONOXIDE ALARMS REQUIRED BY SECTIONS R315.1 AND R315.2 SHALL BE INSTALLED IN THE FOLLOWING LOCATIONS: OUTSIDE OF EACH SEPARATE DWELLING UNIT SLEEPING ARE IN THE IMMEDIATE VICINITY OF THE BEDROOM(S). ON EVERY LEVEL OF A DWELLING UNIT INCLUDING BASEMENTS. CARBON MONOXIDE ALARMS COMBINED WITH SMOKE ALARMS SHALL COMPLY WITH SECTION R315, ALL APPLICABLE STANDARDS, AND REQUIREMENTS FOR LISTING AND APPROVAL BY THE OFFICE OF THE STATE FIRE MARSHALL, FOR SMOKE ALARMS.
15) EXHAUST FANS TO BE 50 CFM INTERMITTENT OR 20 CFM CONTINUOS. IN WATER CLOSETS, 50 CFM CONTINUOS.
16) ALL RECEPTACLES IN THE BATHROOMS, UTILITY ROOMS, KITCHEN COUNTERS, KITCHEN ISLAND, GARAGE (INCLUDING CEILING MOUNTED) AND ALL EXTERIOR LOCATIONS ARE TO BE GFCI PROTECTED CEC 210.8(a).
17) CONDUIT IN CONCRETE SLAB IS TO BE RATED FOR WET LOCATIONS. CEC 430.
18) PROVIDE DEDICATED CIRCUITS FOR FOR BATHROOM CIRCUITS SERVING ONLY THE RECEPTACLES PER CEC210.11(c)(3).
19) PROVIDE TAMPER RESISTANT RECEPTACLES IN ALL NEW CIRCUITS PER CEC SECTION 406.12. & 406.4(D)(5).
20) OUTDOOR LIGHTS TO BE "HIGH EFFICACY" OR "LOW EFFICACY" AND ON PHOTO/MOTION SENSOR PER CA ENERGY SECTION 150.0(k)9A.
21) HOSE BIBS SHALL HAVE NON-REMOVABLE BACKFLOW PREVENTER OR BIB-TYPE VACUM BREAKER.
22) WATER CLOSETS TO BE 1.28 GALLONS PER FLUSH MAXIMUM OR DUAL FLUSH PER CPC 411.2.
23) KITCHEN FAUCET TO BE 1.8 GALLONS PER MINUTE, MAXIMUM PER CPC 4.303.1.4.4.
24) LAVATORY FAUCET TO BE 1.2 GALLONS PER MINUTE, MAXIMUM, PER CPC 407.2.2.
25) SHOWER HEADS TO BE 1.8 GALLONS PER MINUTE AT 80 PSI, MAXIMUM, PER CPC 408.3

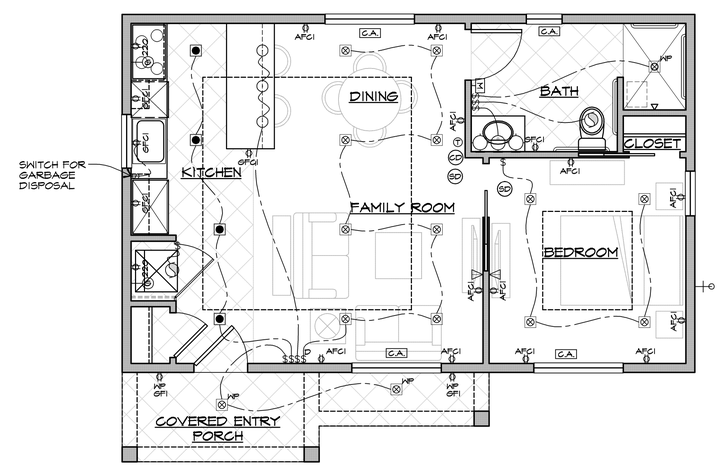

ELECTRICL/ MECHANICAL PLAN

SCALE: 1/4" = 1'-0"

TOWN OF DANVILLE USE ONLY

REVISIONS	DATE

LICENSED ARCHITECT
WILLIAM A. WOOD
C 13874
Jan. 31, 2025
REN. DATE
STATE OF CALIFORNIA

DANVILLE ACCESSORY DWELLING UNITS - STUDIO

DANVILLE CA 94526

WILLIAM WOOD ARCHITECTS
301 HARTZ AVENUE, SUITE 203
DANVILLE, CALIFORNIA 94526
(925) 820-8233

THIS IS AN ORIGINAL, UNPUBLISHED WORK, AND MAY NOT BE DUPLICATED, PUBLISHED, OR OTHERWISE USED WITHOUT WRITTEN CONSENT OF WILLIAM WOOD ARCHITECTS.

COPYRIGHT © WILLIAM WOOD ARCHITECTS, 2023

DRAWN	JJ
CHECKED	WW
DATE	03-30-23
SCALE	AS SHOWN
JOB NO.	20.921R
SHEET	A4
OF	SHEETS

Apr 26, 2023 - 4:07pm A4 Studio Mediterranean style.dwg

BUILDING ENERGY ANALYSIS REPORT

PROJECT:

Town of Danville ADU
Danville, CA 94526

Project Designer:

William Wood Architects
301 Hartz Ave #203
Danville, CA 94526
(925) 820-8233

Report Prepared by:

Jason Bennett
DP Advanced Engineering Inc.
3381 Walnut Blvd. Suite 220
Brentwood, CA 94513
(925) 516-3502

Job Number:

W021420

Date:

March 31, 2023

TOWN OF DANVILLE USE ONLY

Project Name: Danville ADU Mediterranean Studio **Calculation Date/Time:** 2023-03-30T18:09:40-07:00

Calculation Description: Title 24 Analysis **Input File Name:** Danville ADU_Mediterranean_Studio.ribd22

GENERAL INFORMATION					
01	**Project Name**	Danville ADU Mediterranean Studio			
02	**Run Title**	Title 24 Analysis			
03	**Project Location**	Varies			
04	**City**	Danville, CA	05	**Standards Version**	2022
06	**Zip code**	94526	07	**Software Version**	CBECC-Res 2022.2.1
08	**Climate Zone**	12	09	**Front Orientation (deg/ Cardinal)**	All orientations
10	**Building Type**	Single family	11	**Number of Dwelling Units**	1
12	**Project Scope**	Newly Constructed	13	**Number of Bedrooms**	1
14	**Addition Cond. Floor Area (ft^2)**	0	15	**Number of Stories**	1
16	**Existing Cond. Floor Area (ft^2)**	n/a	17	**Fenestration Average U-factor**	0.31
18	**Total Cond. Floor Area (ft^2)**	640	19	**Glazing Percentage (%)**	17.30%
20	**ADU Bedroom Count**	n/a			

COMPLIANCE RESULTS	
01	**Building Complies with Computer Performance**
02	**This building incorporates features that require field testing and/or verification by a certified HERS rater under the supervision of a CEC-approved HERS provider.**
03	**This building incorporates one or more Special Features shown below**

TOWN OF DANVILLE USE ONLY
CalCERTS, Inc. HERS PROVIDER

ENERGY DESIGN RATINGS

	Energy Design Ratings			Compliance Margins		
	Source Energy (EDR1)	Efficiency[1] EDR (EDR2efficiency)	Total[2] EDR (EDR2total)	Source Energy (EDR1)	Efficiency[1] EDR (EDR2efficiency)	Total[2] EDR (EDR2total)
Standard Design	41.1	44.5	58.9			
Proposed Design						
North Facing	33.8	40.5	56.6	7.3	4	2.3
East Facing	34	41.5	57.2	7.1	3	1.7
South Facing	33.5	39.7	56	7.6	4.8	2.9
West Facing	34.1	43.3	58.2	7	1.2	0.7
RESULT[3]: PASS						

[1]Efficiency EDR includes improvements like a better building envelope and more efficient equipment

[2]Total EDR includes efficiency and demand response measures such as photovoltaic (PV) system and batteries

[3]Building complies when source energy, efficiency and total compliance margins are greater than or equal to zero and unmet load hour limits are not exceeded

- Standard Design PV Capacity: 0.00 kWdc
- Proposed PV Capacity Scaling: North (0.00 kWdc) East (0.00 kWdc) South (0.00 kWdc) West (0.00 kWdc)

TOWN OF DANVILLE USE ONLY

CalCERTS, Inc. HERS PROVIDER

ENERGY USE SUMMARY

Energy Use	Standard Design Source Energy (EDR1) (kBtu/ft^2 -yr)	Standard Design TDV Energy (EDR2) (kTDV/ft^2 -yr)	Proposed Design Source Energy (EDR1) (kBtu/ft^2 -yr)	Proposed Design TDV Energy (EDR2) (kTDV/ft^2 -yr)	Compliance Margin (EDR1)	Compliance Margin (EDR2)
Space Heating	7.13	31.36	3.2	24.6	3.93	6.76
Space Cooling	1.06	31.57	0.99	33.14	0.07	-1.57
IAQ Ventilation	0.87	9.28	1.38	14.79	-0.51	-5.51
Water Heating	3.59	37.82	2.64	27.67	0.95	10.15
Self Utilization/Flexibility Credit				0		0
North Facing Efficiency Compliance Total	**12.65**	**110.03**	**8.21**	**100.2**	**4.44**	**9.83**
Space Heating	7.13	31.36	3.18	24.18	3.95	7.18
Space Cooling	1.06	31.57	1.15	36.04	-0.09	-4.47
IAQ Ventilation	0.87	9.28	1.38	14.79	-0.51	-5.51
Water Heating	3.59	37.82	2.64	27.67	0.95	10.15
Self Utilization/Flexibility Credit				0		0
East Facing Efficiency Compliance Total	**12.65**	**110.03**	**8.35**	**102.68**	**4.3**	**7.35**

TOWN OF DANVILLE USE ONLY

CalCERTS, Inc HERS PROVIDER

ENERGY USE SUMMARY

Energy Use	Standard Design Source Energy (EDR1) (kBtu/ft^2 -yr)	Standard Design TDV Energy (EDR2) (kTDV/ft^2 -yr)	Proposed Design Source Energy (EDR1) (kBtu/ft^2 -yr)	Proposed Design TDV Energy (EDR2) (kTDV/ft^2 -yr)	Compliance Margin (EDR1)	Compliance Margin (EDR2)
Space Heating	7.13	31.36	3.04	23	4.09	8.36
Space Cooling	1.06	31.57	0.99	32.6	0.07	-1.03
IAQ Ventilation	0.87	9.28	1.38	14.79	-0.51	-5.51
Water Heating	3.59	37.82	2.64	27.67	0.95	10.15
Self Utilization/Flexibility Credit				0		0
South Facing Efficiency Compliance Total	**12.65**	**110.03**	**8.05**	**98.06**	**4.6**	**11.97**
Space Heating	7.13	31.36	3.12	23.97	4.01	7.39
Space Cooling	1.06	31.57	1.28	40.58	-0.22	-9.01
IAQ Ventilation	0.87	9.28	1.38	14.79	-0.51	-5.51
Water Heating	3.59	37.82	2.64	27.67	0.95	10.15
Self Utilization/Flexibility Credit				0		0
West Facing Efficiency Compliance Total	**12.65**	**110.03**	**8.42**	**107.01**	**4.23**	**3.02**

TOWN OF DANVILLE USE ONLY

CalCERTS, Inc. HERS PROVIDER

ENERGY USE INTENSITY

	Standard Design (kBtu/ft^2 - yr)	Proposed Design (kBtu/ft^2 - yr)	Compliance Margin (kBtu/ft^2 - yr)	Margin Percentage
North Facing				
Gross EUI[1]	32.25	26.5	5.75	17.83
Net EUI[2]	32.25	26.5	5.75	17.83
East Facing				
Gross EUI[1]	32.25	26.75	5.5	17.05
Net EUI[2]	32.25	26.75	5.5	17.05
South Facing				
Gross EUI[1]	32.25	26.3	5.95	18.45
Net EUI[2]	32.25	26.3	5.95	18.45
West Facing				
Gross EUI[1]	32.25	26.86	5.39	16.71
Net EUI[2]	32.25	26.86	5.39	16.71

Notes
1. Gross EUI is Energy Use Total (not including PV) / Total Building Area.
2. Net EUI is Energy Use Total (including PV) / Total Building Area.

TOWN OF DANVILLE USE ONLY

CalCERTS, Inc. HERS PROVIDER

REQUIRED PV SYSTEMS

01	02	03	04	05	06	07	08	09	10	11	12
DC System Size (kWdc)	**Exception**	**Module Type**	**Array Type**	**Power Electronics**	**CFI**	**Azimuth (deg)**	**Tilt Input**	**Array Angle (deg)**	**Tilt: (x in 12)**	**Inverter Eff. (%)**	**Annual Solar Access (%)**
0		Standard (14-17%)	Fixed	none	true	n/a	n/a	n/a	n/a	n/a	

REQUIRED SPECIAL FEATURES

The following are features that must be installed as condition for meeting the modeled energy performance for this computer analysis.

- PV exception 2: No PV required when minimum PV size (Section 150.1(c)14) < 1.8 kWdc (0 kW)
- Indoor air quality, balanced fan
- IAQ Ventilation System Heat Recovery: minimum 67 SRE and 73 ASRE
- IAQ Ventilation System: supply outside air inlet, filter, and H/ERV cores accessible per RACM Reference Manual
- IAQ Ventilation System: fault indicator display
- Insulation below roof deck
- Window overhangs and/or fins
- Northwest Energy Efficiency Alliance (NEEA) rated heat pump water heater; specific brand/model, or equivalent, must be installed

HERS FEATURE SUMMARY

The following is a summary of the features that must be field-verified by a certified HERS Rater as a condition for meeting the modeled energy performance for this computer analysis. Additional detail is provided in the buildng tables below. Registered CF2Rs and CF3Rs are required to be completed in the HERS Registry

- Indoor air quality ventilation
- Kitchen range hood
- Minimum Airflow
- Verified SEER/SEER2
- Verified Refrigerant Charge
- Fan Efficacy Watts/CFM
- Verified HSPF
- Verified heat pump rated heating capacity
- Duct leakage testing

TOWN OF DANVILLE USE ONLY

CalCERTS, Inc. HERS PROVIDER

BUILDING - FEATURES INFORMATION

01	02	03	04	05	06	07
Project Name	**Conditioned Floor Area (ft^2)**	**Number of Dwelling Units**	**Number of Bedrooms**	**Number of Zones**	**Number of Ventilation Cooling Systems**	**Number of Water Heating Systems**
Danville ADU Mediterranean Studio	640	1	1	1	0	1

ZONE INFORMATION

01	02	03	04	05	06	07
Zone Name	**Zone Type**	**HVAC System Name**	**Zone Floor Area (ft^2)**	**Avg. Ceiling Height**	**Water Heating System 1**	**Status**
Accessory Unit	Conditioned	HVAC System 1	640	10	DHW System 1	New

OPAQUE SURFACES

01	02	03	04	05	06	07	08
Name	**Zone**	**Construction**	**Azimuth**	**Orientation**	**Gross Area (ft^2)**	**Window and Door Area (ft2)**	**Tilt (deg)**
Front Wall	Accessory Unit	Exterior 2x6 Wall R-21	0	Front	320	74	90
Left Wall	Accessory Unit	Exterior 2x6 Wall R-21	90	Left	200	9	90
Back Wall	Accessory Unit	Exterior 2x6 Wall R-21	180	Back	320	19	90
Right Wall	Accessory Unit	Exterior 2x6 Wall R-21	270	Right	200	9	90
Ceiling Below Attic	Accessory Unit	R-38 Attic Ceiling	n/a	n/a	640	n/a	n/a

ATTIC

01	02	03	04	05	06	07	08
Name	**Construction**	**Type**	**Roof Rise (x in 12)**	**Roof Reflectance**	**Roof Emittance**	**Radiant Barrier**	**Cool Roof**
Attic	Attic Roof	Ventilated	4	0.1	0.85	No	No

TOWN OF DANVILLE USE ONLY
CalCERTS, Inc. HERS PROVIDER

FENESTRATION / GLAZING

01	02	03	04	05	06	07	08	09	10	11	12	13	14
Name	**Type**	**Surface**	**Orientation**	**Azimuth**	**Width (ft)**	**Height (ft)**	**Mult.**	**Area (ft^2)**	**U-factor**	**U-factor Source**	**SHGC**	**SHGC Source**	**Exterior Shading**
Front Door	Window	Front Wall	Front	0	3	8	1	24	0.34	NFRC	0.2	NFRC	Bug Screen
FamilyRm 5050	Window	Front Wall	Front	0	5	5	1	25	0.3	NFRC	0.23	NFRC	Bug Screen
Bedroom 5050	Window	Front Wall	Front	0	5	5	1	25	0.3	NFRC	0.23	NFRC	Bug Screen
Kitchen 3030	Window	Left Wall	Left	90	3	3	1	9	0.3	NFRC	0.23	NFRC	Bug Screen
Bathroom 2020	Window	Back Wall	Back	180	2	2	1	4	0.3	NFRC	0.23	NFRC	Bug Screen
DiningRm 5030	Window	Back Wall	Back	180	5	3	1	15	0.3	NFRC	0.23	NFRC	Bug Screen
Bedroom 3030	Window	Right Wall	Right	270	3	3	1	9	0.3	NFRC	0.23	NFRC	Bug Screen

OVERHANGS AND FINS

01	02	03	04	05	06	07	08	09	10	11	12	13	14
Window	**Overhang**					**Left Fin**				**Right Fin**			
	Depth	**Dist Up**	**Left Extent**	**Right Extent**	**Flap Ht.**	**Depth**	**Top Up**	**Dist L**	**Bot Up**	**Depth**	**Top Up**	**Dist R**	**Bot Up**
Front Door	5	0	2	2	0	0	0	0	0	0	0	0	0
FamilyRm 5050	4	0	2	2	0	0	0	0	0	0	0	0	0
Bedroom 5050	1	0	2	2	0	0	0	0	0	0	0	0	0
Kitchen 3030	1	0	2	2	0	0	0	0	0	0	0	0	0
Bathroom 2020	1	0	2	2	0	0	0	0	0	0	0	0	0
DiningRm 5030	1	0	2	2	0	0	0	0	0	0	0	0	0

TOWN OF DANVILLE USE ONLY
CalCERTS, Inc. HERS PROVIDER

OVERHANGS AND FINS

01	02	03	04	05	06	07	08	09	10	11	12	13	14
Window	Overhang					Left Fin				Right Fin			
	Depth	Dist Up	Left Extent	Right Extent	Flap Ht.	Depth	Top Up	Dist L	Bot Up	Depth	Top Up	Dist R	Bot Up
Bedroom 3030	1	0	2	2	0	0	0	0	0	0	0	0	0

SLAB FLOORS

01	02	03	04	05	06	07	08
Name	Zone	Area (ft^2)	Perimeter (ft)	Edge Insul. R-value and Depth	Edge Insul. R-value and Depth	Carpeted Fraction	Heated
Slab On Grade	Accessory Unit	640	104	none	0	80%	No

OPAQUE SURFACE CONSTRUCTIONS

01	02	03	04	05	06	07	08
Construction Name	Surface Type	Construction Type	Framing	Total Cavity R-value	Interior / Exterior Continuous R-value	U-factor	Assembly Layers
Exterior 2x6 Wall R-21	Exterior Walls	Wood Framed Wall	2x6 @ 16 in. O. C.	R-21	None / None	0.065	Inside Finish: Gypsum Board Cavity / Frame: R-21 / 2x6 Sheathing / Insulation: Wood Siding/sheathing/decking Exterior Finish: 3 Coat Stucco
Attic Roof	Attic Roofs	Wood Framed Ceiling	2x4 Top Chord of Roof Truss @ 24 in. O. C.	R-13	None / None	0.072	Roofing: 10 PSF (RoofTileAirGap) Tile Gap: present Roof Deck: Wood Siding/sheathing/decking Cavity / Frame: R-13.0 / 2x4 Top Chrd Around Roof Joists: R-0.0 insul.
R-38 Attic Ceiling	Ceilings (below attic)	Wood Framed Ceiling	2x4 Bottom Chord of Truss @ 24 in. O. C.	R-38	None / None	0.025	Over Ceiling Joists: R-28.9 insul. Cavity / Frame: R-9.1 / 2x4 Btm Chrd Inside Finish: Gypsum Board

TOWN OF DANVILLE USE ONLY
CalCERTS, Inc.
HERS PROVIDER

BUILDING ENVELOPE - HERS VERIFICATION

01	02	03	04	05
Quality Insulation Installation (QII)	**High R-value Spray Foam Insulation**	**Building Envelope Air Leakage**	**CFM50**	**CFM50**
Not Required	Not Required	N/A	n/a	n/a

WATER HEATING SYSTEMS

01	02	03	04	05	06	07	08	09
Name	**System Type**	**Distribution Type**	**Water Heater Name**	**Number of Units**	**Solar Heating System**	**Compact Distribution**	**HERS Verification**	**Water Heater Name (#)**
DHW System 1	Domestic Hot Water (DHW)	Standard	Heat Pump WH	1	n/a	None	n/a	Heat Pump WH (1)

WATER HEATERS - NEEA HEAT PUMP

01	02	03	04	05	06	07	08
Name	**# of Units**	**Tank Vol. (gal)**	**NEEA Heat Pump Brand**	**NEEA Heat Pump Model**	**Tank Location**	**Duct Inlet Air Source**	**Duct Outlet Air Source**
Heat Pump WH	1	40	Rheem	RheemPROPH40T2RH37515	Outside	Outside	Outside

WATER HEATING - HERS VERIFICATION

01	02	03	04	05	06	07
Name	**Pipe Insulation**	**Parallel Piping**	**Compact Distribution**	**Compact Distribution Type**	**Recirculation Control**	**Shower Drain Water Heat Recovery**
DHW System 1 - 1/1	Not Required	Not Required	Not Required	None	Not Required	Not Required

TOWN OF DANVILLE USE ONLY
CalCERTS, Inc. HERS PROVIDER

SPACE CONDITIONING SYSTEMS

01	02	03	04	05	06	07	08	09
Name	**System Type**	**Heating Unit Name**	**Heating Equipment Count**	**Cooling Unit Name**	**Cooling Equipment Count**	**Fan Name**	**Distribution Name**	**Required Thermostat Type**
HVAC System 1	Heat pump heating cooling	PEAD-A24AA7	1	PEAD-A24AA7	1	HVAC Fan System 1	Distribution System 1	Setback

HVAC - HEAT PUMPS

01	02	03	04	05	06	07	08	09	10	11	12	13
Name	**System Type**	**Number of Units**	**Heating**				**Cooling**			**Zonally Controlled**	**Compressor Type**	**HERS Verification**
			Efficiency Type	**HSPF / HSPF2 / COP**	**Cap 47**	**Cap 17**	**Efficiency Type**	**SEER / SEER2**	**EER / EER / CEER**			
PEAD-A24AA7	Central split HP	1	HSPF	10.8	26000	14800	EERSEER	19.6	11.7	Not Zonal	Single Speed	PEAD-A24AA7-hers-htpump

HVAC HEAT PUMPS - HERS VERIFICATION

01	02	03	04	05	06	07	08	09
Name	**Verified Airflow**	**Airflow Target**	**Verified EER/EER2**	**Verified SEER/SEER2**	**Verified Refrigerant Charge**	**Verified HSPF/HSPF2**	**Verified Heating Cap 47**	**Verified Heating Cap 17**
PEAD-A24AA7-hers-htpump	Required	350	Not Required	Required	Yes	Yes	Yes	Yes

HVAC - DISTRIBUTION SYSTEMS

01	02	03	04	05	06	07	08	09	10	11	12
Name	**Type**	**Design Type**	**Duct Ins. R-value**		**Duct Location**		**Surface Area**		**Bypass Duct**	**Duct Leakage**	**HERS Verification**
			Supply	**Return**	**Supply**	**Return**	**Supply**	**Return**			
Distribution System 1	Unconditioned attic	Non-Verified	R-6	R-6	Attic	Attic	n/a	n/a	No Bypass Duct	Sealed and Tested	Distribution System 1-hers-dist

TOWN OF DANVILLE USE ONLY
CalCERTS, Inc. HERS PROVIDER

HVAC DISTRIBUTION - HERS VERIFICATION

01	02	03	04	05	06	07	08	09
Name	**Duct Leakage Verification**	**Duct Leakage Target (%)**	**Verified Duct Location**	**Verified Duct Design**	**Buried Ducts**	**Deeply Buried Ducts**	**Low-leakage Air Handler**	**Low Leakage Ducts Entirely in Conditioned Space**
Distribution System 1-hers-dist	Yes	5.0	Not Required	Not Required	Not Required	Credit not taken	Not Required	No

HVAC - FAN SYSTEMS

01	02	03	04
Name	**Type**	**Fan Power (Watts/CFM)**	**Name**
HVAC Fan System 1	HVAC Fan	0.45	HVAC Fan System 1-hers-fan

HVAC FAN SYSTEMS - HERS VERIFICATION

01	02	03
Name	**Verified Fan Watt Draw**	**Required Fan Efficacy (Watts/CFM)**
HVAC Fan System 1-hers-fan	Required	0.45

INDOOR AIR QUALITY (IAQ) FANS

01	02	03	04	05	06	07	08	09
Dwelling Unit	**Airflow (CFM)**	**Fan Efficacy (W/CFM)**	**IAQ Fan Type**	**Includes Heat/Energy Recovery?**	**IAQ Recovery Effectiveness - SRE**	**Includes Fault Indicator Display?**	**HERS Verification**	**Status**
SFam IAQVentRpt 1-1	49	0.816326	Balanced	Yes	73	No	Yes	

TOWN OF DANVILLE USE ONLY
CalCERTS, Inc. HERS PROVIDER

DOCUMENTATION AUTHOR'S DECLARATION STATEMENT	
1. I certify that this Certificate of Compliance documentation is accurate and complete.	
Documentation Author Name: Jason E Bennett	Documentation Author Signature: Jason Bennett
Company: DP Advanced Engineering	Signature Date: 2023-03-30 19:18:04
Address: 3381 Walnut Blvd. Ste. 220	CEA/ HERS Certification Identification (If applicable): R19-21-30042
City/State/Zip: Brentwood, CA 94513	Phone: 925-516-3502

RESPONSIBLE PERSON'S DECLARATION STATEMENT

I certify the following under penalty of perjury, under the laws of the State of California:

1. I am eligible under Division 3 of the Business and Professions Code to accept responsibility for the building design identified on this Certificate of Compliance.
2. I certify that the energy features and performance specifications identified on this Certificate of Compliance conform to the requirements of Title 24, Part 1 and Part 6 of the California Code of Regulations.
3. The building design features or system design features identified on this Certificate of Compliance are consistent with the information provided on other applicable compliance documents, worksheets, calculations, plans and specifications submitted to the enforcement agency for approval with this building permit application.

Responsible Designer Name: William Wood	Responsible Designer Signature: William Wood
Company: William Wood Architects	Date Signed: 2023-03-31 08:35:29
Address: 301 Hartz Ave #203	License: C13874
City/State/Zip: Danville, CA 94526	Phone: 925-820-8233

TOWN OF DANVILLE USE ONLY

CalCERTS, Inc. HERS PROVIDER

Digitally signed by CalCERTS. This digital signature is provided in order to secure the content of this registered document, and in no way implies Registration Provider responsibility for the accuracy of the information.

Easy to Verify at CalCERTS.com

ADVANCED ENGINEERING
STRUCTURAL ENGINEERING SOLUTIONS

TITLE 24 SUMMARY OF FEATURES

PROJECT: TOWN OF DANVILLE ADU **DATE: 3-31-2023**
JOB NO: W021420 **ANALYST: J. BENNETT**

ENVELOPE INSULATION

EXTERIOR WALLS:
R-21 IN 2x6
FOUNDATION:
SLAB, NOT INSULATED
ROOF OVER LIVING SPACE:
R-38 BETWEEN CEILING JOISTS
R-13 BETWEEN RAFTERS

WINDOW PERFORMANCE

MAXIMUM WINDOW PERFORMANCE VALUES (U-FACTOR / SHGC)
WINDOWS: .30/.23
FRENCH DOORS: .32/.16

DOMESTIC HOT WATER

RHEEM 40-GALLON HEAT PUMP WATER HEATER OR EQUIV.

SOLAR (STUDIO)

(NOT REQUIRED; CALCULATED SIZE IS <1.8 KW)

SOLAR (1 BEDROOM)

2.0 KW MINIMUM
ACCEPTABLE ORIENTATION:
(DEGREES EAST OF TRUE NORTH)

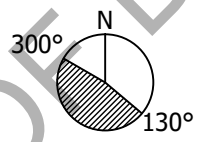

HERS VERIFICATIONS

- INDOOR AIR QUALITY VENTILATION
- KITCHEN RANGE HOOD
- MINIMUM AIRFLOW [350 CFM/TON]
- VERIFIED SEER [19.6]
- VERIFIED REFRIGERANT CHARGE
- FAN EFFICACY WATTS/CFM [0.45]
- VERIFIED HSPF [10.8]
- VERIFIED HEAT PUMP RATED HEATING CAPACITY
- DUCT LEAKAGE TESTING [5%]

SPACE HEATING & COOLING

HEAT PUMP (10.2 HSPF, 19.6 SEER, 11.7 EER)
MITSUBISHI PEAD-A24AA7 + PUZ-A24NHA7
AHRI # 201754661

DUCTS

SUPPLY AIR DUCTS IN ATTIC
DUCTS IN UNCONDITIONED SPACE TO HAVE R-6 INSULATION

INDOOR AIR QUALITY

BROAN ERV100S ENERGY RECOVERY VENTILATOR OR EQUIV.

TOWN OF DANVILLE USE ONLY

3381 Walnut Blvd. Ste.220 Brentwood, CA 94513 PH: 925.516.3502 FX: 925.262.4662 W: WWW.ADVANCEDENGINEERINGINC.COM

ADVANCED ENGINEERING
Structural Engineering Solutions

3381 Walnut Blvd. Ste. 220 | Phone: 925.516.3502 | Fax: 925.262.4662 | Email: info@advengineering.com

Structural Calculations

PROJECT: Town of Danville Studio ADU
ADDRESS: Danvile, California

JOB No.: W021420
DELTA: Permit Submittal
DATE: March 24, 2023

CLIENT: Town of Danville

REGISTERED PROFESSIONAL ENGINEER
Justen N. Peek
C 76751
EXP. 12/31/2024
CIVIL
State of California

GOVERNING CODE: California Building Code, 2022 Edition
CONSTRUCTION: One-Story Wood Framed Building

STRUCTURE:
Vertical Load System - Wood Framed Roof
Lateral Load System - Wood Framed Shear Walls

TOWN OF DANVILLE USE ONLY

STRUCTURAL MATERIALS:

Structural Steel:

W Shapes	ASTM A992, Fy = 50 ksi
Shapes (M, S, HP, C, MC, L)	ASTM A572, Grade 50
Pipe	ASTM A53, Grade B
Tube (HSS)	ASTM A500, Grade B
Plates and Bars	ASTM A572, Grade 50
Welding	Current AWS D1.1
Bolts - Unfinished	ASTM A307
Bolts - High Strength (HSB)	ASTM A325 SC/N/X
Threaded Rods	ASTM A449
Light Gage Steel Studs and Joists	ASTM A653, Grade 50
Welding (Light Gage)	Current AWS D1.3

Concrete:

Slab on Grade	2500 psi @ 28 Days
Foundation	2500 psi @ 28 Days
Tilt-Up Wall Panels	4000 psi @ 28 Days
Structural Concrete	3000 psi @ 28 Days
Reinforcing Steel (#3 Rebar)	ASTM A615, Grade 40
Reinforcing Steel (#4 & larger)	ASTM A615, Grade 60
Welding (Reinf.)	Current AWS D1.4

Wood:

2" to 4" Thick x 2" and Wider	DF No. 2 or better
Joists and Planks	DF No. 2 or better
Beams and Stringers	DF No. 1 or better
Posts and Timbers	DF No. 1 or better
Glu-lam Beams (simple span)	2400F-V4 DF/DF
Glu-lam Beams (cantilevers)	2400F-V8 DF/DF
Sheathing	Exposure 1, Grade C-D, C-C

TOWN OF DANVILLE USE ONLY

LOADING SCHEDULE:

Roof Dead Load: **Max. Roof Pitch /12:** 5

Roofing:	Concrete Tile	10.8 psf
Sheathing:	1/2" Plywood	1.8 psf
Insulation:	R38 Insulation Ceiling & R19 Insulation Roof Deck	1.0 psf
Framing:	Trusses @ 24" o.c.	2.5 psf
Ceiling:	5/8" Gyp. Installed on Bottom of Roof Framing	2.8 psf
Sprinklers:	Automatic Fire Sprinklers	1.0 psf
Misc:	HVAC + Miscellaneous	2.1 psf
		22.0 psf

Photovoltaic Dead Load:

Non-concurrent with Live Load **3.0 psf**

Roof Live Load:

Sloped Roof (Reducible) **20.0 psf**

Exterior Wall Load:

Wall Type: 2x6 @ 16 in, 5/8" Gyp, Insulated, 7/8" Stucco **17.0 psf**

Interior Wall Load:

Wall Type: 2x4 @ 16 in, (2) 5/8" Gyp, Insulated **7.0 psf**

TOWN OF DANVILLE USE ONLY

SEISMIC LOADS: ASCE 7-16 SECTION 12.8 (EQUIV. LATERAL FORCE):

SITE INFORMATION:

Ss	2.500	ASCE 7-16 Sect. 11.4.2
S_1	1.200	ASCE 7-16 Sect. 11.4.2
Site Class	D	Per Geotech Report
Risk Category	II	ASCE 7-16 Table 1.5-1
Importance Factor	*1.0*	ASCE 7-16 Table 1.5-2

Site coefficients and adjusted maximum considered eq. spectral response accel. parameters

Fa	*1.200*	ASCE 7-16 Sect. 11.4.4
Fv	*1.700*	ASCE 7-16 Sect. 11.4.4

Table 11.4-1 Short-Period Site Coefficient Fa

Site Class	Ss≤ 0.25	Ss= 0.50	Ss= 0.75	Ss= 1.00	Ss= 1.25	Ss≥ 1.50
A	0.8	0.8	0.8	0.8	0.8	0.8
B	0.9	0.9	0.9	0.9	0.9	0.9
C	1.3	1.3	1.2	1.2	1.2	1.2
D	1.6	1.4	1.2	1.1	1.0	1.0
E	2.4	1.7	1.3	1.2	1.2	1.2
F	*Site-Specific Response Analysis Required*					

Table 11.4-2 Short-Period Site Coefficient Fv

Site Class	S1≤ 0.10	S1= 0.20	S1= 0.30	S1= 0.40	S1= 0.50	S1≥ 0.60
A	0.8	0.8	0.8	0.8	0.8	0.8
B	0.8	0.8	0.8	0.8	0.8	0.8
C	1.5	1.5	1.5	1.5	1.5	1.4
D	2.4	2.2	2	1.9	1.8	1.7
E	4.2	*3.3*	2.8	2.4	2.2	2
F	*Site-Specific Response Analysis Required*					

$S_{MS}=FaS_S$	3.000	(EQ. 11.4-1)
$S_{M1}=FvS_1$	2.040	(EQ. 11.4-2)
$S_{DS}=(2/3)S_{MS}$	2.000 g	(EQ. 11.4-3)
$S_{D1}=(2/3)S_{M1}$	1.360 g	(EQ. 11.4-4)

Seismic Design Category Based on Short-Period Response Accelerations:

VALUE OF S_{DS}	1 OR 11	111	1V
S_{DS}< 0.167g	A	A	A
0.167g ≤S_{DS}< 0.33g	B	B	C
0.33g ≤S_{DS}< 0.50g	C	C	D
0.50g ≤ S_{DS}	D	D	D

S1 IS GREATER THAN 0.75
USE CATEGORY E
PER CBC 1613.2.5

Seismic Design Category Based on 1-Second Response Accelerations:

VALUE OF S_{D1}	1 OR 11	111	1V
S_{D1}< 0.067g	A	A	A
0.067g ≤S_{D1}< 0.133g	B	B	C
0.133g ≤S_{D1}< 0.20g	C	C	D
0.20g ≤ S_{D1}	D	D	D

S1 IS GREATER THAN 0.75
USE CATEGORY E
PER CBC 1613.2.5

TOWN OF DANVILLE USE ONLY

PROJECT: **Town of Danville Studio ADU**
CLIENT: Town of Danville
JOB NO.: W021420 **CALCS BY:** J. Peek **DATE:** 3/24/2023

SEISMIC LOADS: ASCE 7-16 SECTION 12.8 (CONT.):

BUILDING INFORMATION:

Building Height, h_n..... 14.7 ft
Mean Roof Height, H_m..... 12.3 ft
Eave Height, h..... 10.0 ft

Building Depth:
Bldg Depth (Roof Level)..... 25.0 ft

Building Width:
Bldg Width (Roof Level)..... 32.0 ft

EQUIVALENT LATERAL FORCE PROCEDURE:

Seismic Base Shear:

R (ASCE 7-16 Table 12.2-1).....	6.5	
C_t.....	0.020	
X.....	0.75	
Ta = $C_t(h_n)^X$.....	0.15 sec	

Seismic Response Coefficient:

$C_S=S_{DS}/(R/I)$	0.308	(EQ. 12.8-2)
$C_S=S_{D1}/T(R/I)$	1.396	(EQ. 12.8-3)
$C_S=0.044S_{DS}I$	0.088	(EQ. 12.8-5)
$C_S=0.5S_1/(R/I)$	0.092	(EQ. 12.8-6)

Seismic Base Shear:
$V=C_SW$ ..... **0.308 W** (EQ. 12.8-1)

BUILDING WEIGHTS:

Roof Loads:	AREA (sq ft)	WEIGHT (psf)	TOTAL (lb)
Roof Area	842	22.0	18545
Roof Top Deck	0	15.0	0
Photovoltaic Area	842	3.0	2526

Roof Loads:	LENGTH (ft)	WEIGHT (psf)	TOTAL (lb)
Linear Feet of Ext. Wall	114	17.0	8305
Linear Feet of Int. Wall	125	7.0	4426

*Note: Approximate Fenestration Percentage: 15 %
TOTAL ROOF LOAD (lb): 33802

SEISMIC BASE SHEAR:

Building DL =	33802 lb
Seismic Coef. =	0.308
k=	1.00
Base Shear =	**10401 lb**

CALCULATE SEISMIC SHEAR LOADS:

VERTICAL DISTRIBUTION OF SEISMIC FORCES					
Level	w_x (lb)	Top Plate Height (ft)	h_x (ft)	F_x (lb)	Unit Shear (psf)
ROOF	33802	10.1	12.3	10401	12.4
			$S\ w_i * h_i^k =$	416945	

REDUNDANCY FACTOR (ASCE 7-16 SECTION 12.3.4):

Seismic Design Cat: **USE CATEGORY E** *Note: Refer to calculations on following sheets
Roof East/ West: **1.0** Roof North/South: **1.3**

SUMMARY OF SEISMIC DESIGN LOADS:

Level	Direction	SEISMIC FORCE (lb)	UNIT SHEAR (psf)	Redundancy Factor	ASD DESIGN FORCE (lb)	ASD DESIGN LOAD (psf)
Roof	North/South	10401	12.4	1.3	**9464**	**11.2**
Roof	East/West	10401	12.4	1.0	**7280**	**8.6**

TOWN OF DANVILLE USE ONLY

PROJECT: **Town of Danville Studio ADU**

CLIENT: Town of Danville

JOB NO.: W021420 **CALCS BY:** J. Peek **DATE:** 3/24/2023

WIND ANALYSIS (ENCLOSED, PARTIALLY ENCLOSED AND OPEN BUILDINGS OF ALL HEIGHTS

MAIN WIND-FORCE RESISTING SYSTEM:

Design Wind Speed	95	mph
Wind Exposure	C	
Site Elevation	Unknown	Feet
Topographic factor, ASCE 7-10 Section 26.8.2 - K_{zt} (Assumed Flat Area)	1.00	

BUILDING INFORMATION:

Building Height, h_n	14.7 ft
Mean Roof Height, H_m	12.3 ft
Eave Height, h	10.0 ft

Building Depth "B":

Bldg Depth (Roof Level)	25.0 ft
Bldg Depth (Floor Level)	0.0 ft

Building Width "L":

Bldg Width (Roof Level)	32.0 ft
Bldg Width (Floor Level)	0.0 ft

DETERMINE WIND LOAD PARAMETERS:

DIRECTIONALITY FACTOR (K_d):	0.85	*** See ASCE 7-16 Section 26.6 and Table 26.6-1*
TOPOGRAPHIC FACTOR (K_{ZT}):	1.00	*** See ASCE 7-16 Section 26.8 and Figure 26.8-1*
GUST FACTOR (G):	0.85	*** See ASCE 7-16 Section 26.11.1*
ENCLOSURE CLASSIFICATION	Enclosed	*** See ASCE 7-16 Section 26.12*
INTERNAL PRESSURE (CG_{PI})	0.18	*** See ASCE 7-16 Section 26.12 and Table 26.13-1*
GROUND ELEVATION FACTOR (K_e)	1.00	*** See ASCE 7-16 Table 26.9-1, Note 2*

Table 26.10-1 Velocity Pressure Coefficients, K_z

Height Above Ground (ft)	Exposure Category B	C	D
15.0	0.57	0.85	1.03
20.0	0.62	0.90	1.08
25.0	0.66	0.94	1.12
30.0	0.70	0.98	1.16
35.0	0.73	1.01	1.19
40.0	0.76	1.04	1.22
45.0	0.79	1.07	1.25
50.0	0.81	1.09	1.27
55.0	0.83	1.11	1.29
60.0	0.85	1.13	1.31

VELOCITY COEFFICIENT (K_Z): 0.85

*** See ASCE 7-16 Table 26.10.1*

DETERMINE VELOCITY PRESSURE:

q_z=0.00256 K_Z K_{ZT} K_d $K_e V^2$: 16.69 psf

TOWN OF DANVILLE USE ONLY

PROJECT: **Town of Danville Studio ADU**

CLIENT: Town of Danville

JOB NO.: W021420 **CALCS BY:** J. Peek **DATE:** 3/24/2023

WIND ANALYSIS (ENCLOSED, PARTIALLY ENCLOSED AND OPEN BUILDINGS OF ALL HEIGHTS

DETERMINE WALL PRESSURE:

Wall Pressure Coefficients, ASCE-7 (Figure 27..3-1)

Surface	L/B	Cp	Use With
Windward Wall	All Values	0.8	q_z
Leeward Wall	0-1	-0.5	q_h
	2	-0.3	
	>4	-0.2	
Side Wall	All Values	-0.7	q_h

Determine Cp Values

Level	Direction	L/B Values	Windward C_P Value	Leeward C_P Value
Roof	East/West	1.28	0.80	-0.444

Level	Direction	L/B Values	Windward Cp Value	Leeward C_P Value
Roof	North/South	0.78	0.80	-0.500

Windward Pressures:

Plan North/South
CASE 1: 14.36
CASE 2: 8.35

Plan East/West
CASE 1: 14.36
CASE 2: 8.35

Leeward Pressures:

Plan North/South
CASE 1: 4.09
CASE 2: 10.10

Plan East/West
CASE 1: 3.30
CASE 2: 9.30

SUMMARY OF WIND FORCE DESIGN LOADS

Level	Direction	WIND DEISGN FORCE (lb)	UNIT SHEAR (plf)		ASD DESIGN FORCE (lb)	ASD DESIGN LOAD (plf)
Roof	North/South	4305	135		**2583**	**81**
Roof	East/West	3218	129		**1931**	**77**

TOWN OF DANVILLE USE ONLY

PROJECT: **Town of Danville Studio ADU**
CLIENT: Town of Danville
JOB NO.: W021420 **CALCS BY:** J. Peek **DATE:** 3/24/2023

SHEARWALL DESIGN: ROOF LEVEL

Shearwall Framing: 3/8" CDX ply with 8d Nailing

SHEAR LINE ID:	1	2
DETERMINATION OF LATERAL DESIGN LOADS:		
Grid Line Trib. Area (sq ft):	375	467
Seismic Shear Load (psf):	8.6	8.6
Seismic Shear Force (lb):	3242	4038
Grid Line Trib. Width (ft):	10	15
Wind Design Load (plf):	77	77
Wind Design Force (lb):	772	1159
SHEARWALL LENGTHS:		
Wall Length 1 (ft):	8.0	5.2
Wall Length 2 (ft):	7.4	4.0
Wall Length 3 (ft):	0.0	0.0
Wall Length 4 (ft):	0.0	0.0
Wall Length 5 (ft):	0.0	0.0
SHEARWALL RIGIDITY DESIGN:		
Wall 1 Rigidity K_i (kip/in):	5.12	4.42
Wall 2 Rigidity K_i (kip/in):	4.58	2.99
Wall 3 Rigidity K_i (kip/in):		
Wall 4 Rigidity K_i (kip/in):		
Wall 5 Rigidity K_i (kip/in):		
NAILING DESIGN BASED ON SDPWS SECTION 4.3.4 CAPACITY ADJ:		
Wall 1 Design Shear (plf):	214	466
Sec. 4.3.4.2 Capacity Reduction	*1.00*	*1.00*
Wall 2 Design Shear (plf):	206	436
Sec. 4.3.4.2 Capacity Reduction	*1.00*	*0.93*
Wall 3 Design Shear (plf):		
Sec. 4.3.4.2 Capacity Reduction		
Wall 4 Design Shear (plf):		
Sec. 4.3.4.2 Capacity Reduction		
Wall 5 Design Shear (plf):		
Sec. 4.3.4.2 Capacity Reduction		
Shear Capacity (plf):	260	490
Shear Designation #:	**Type 1**	**Type 3**
REDUNDANCY FACTOR ANALYSIS (ASCE 7-16 SECTION 12.3.4):		
Wall 1 Capacity (%):	0.24	0.30
Wall 2 Capacity (%):	0.23	0.23
Wall 3 Capacity (%):		
Wall 4 Capacity (%):		
Wall 5 Capacity (%):		
Redundancy Factor:	**Use 1.0**	**Use 1.0**

TOWN OF DANVILLE USE ONLY

SHEARWALL DESIGN (CONT.): ROOF LEVEL

SHEAR LINE ID:	1	2
SHEARWALL OVERTURNING DESIGN:		
Wall Height (ft):	10.1	10.1
Wall Weight (psf):	17.0	17.0
Roof Trib. Width (ft):	2	2
Roof Weight (psf):	22.0	22.0
SEISMIC UPLIFT FORCE (lb): Load Combo (ASCE 7-16): (0.6-0.14*SDS)D+0.7E		
Wall Dead Load (plf):	69	69
Wall 1 Uplift (lb):	1881	4521
Wall 2 Uplift (lb):	1826	3971
Wall 3 Uplift (lb):		
Wall 4 Uplift (lb):		
Wall 5 Uplift (lb):		
WIND UPLIFT FORCE (lb): Load Combo (ASCE 7-16): 0.6D+0.6W		
Wall Dead Load (plf):	129	129
Wall 1 Uplift (lb):	-3	1014
Wall 2 Uplift (lb):	16	920
Wall 3 Uplift (lb):		
Wall 4 Uplift (lb):		
Wall 5 Uplift (lb):		
HOLDOWN TYPE:		
Wall 1 Holdown Type:	HDU2	HDU5
Wall 2 Holdown Type:	HDU2	HDU5
Wall 3 Holdown Type:		
Wall 4 Holdown Type:		
Wall 5 Holdown Type:		
STORY DRIFT CHECK (C_d=4): Due to approximate nature of rigidity calculation methods, +/- 10% variation OK.		
Wall 1 Defl. Check (in):	1.5	2.8
Wall 2 Defl. Check (in):	1.5	2.8
Wall 3 Defl. Check (in):		
Wall 4 Defl. Check (in):		
Wall 5 Defl. Check (in):		
Wall 1 Drift Check (in):	OK	OK
Wall 1 Drift Check (in):	OK	OK
Wall 1 Drift Check (in):		
Wall 1 Drift Check (in):		
Wall 5 Drift Check (in):		

AREA VERIFICATION CHECK:

Seismic Trib Area Sum: 842 sq ft Trib Width Sum: 25 ft

TOWN OF DANVILLE USE ONLY

PROJECT: **Town of Danville Studio ADU**
CLIENT: Town of Danville
JOB NO.: W021420 **CALCS BY:** J. Peek **DATE:** 3/24/2023

SHEARWALL DESIGN: ROOF LEVEL

Shearwall Framing: 3/8" CDX ply with 8d Nailing

SHEAR LINE ID:	A	B
DETERMINATION OF LATERAL DESIGN LOADS:		
Grid Line Trib. Area (sq ft):	451	391
Seismic Shear Load (psf):	11.2	11.2
Seismic Shear Force (lb):	5069	4395
Grid Line Trib. Width (ft):	16	16
Wind Design Load (plf):	81	81
Wind Design Force (lb):	1291	1291
SHEARWALL LENGTHS:		
Wall Length 1 (ft):	11.5	9.5
Wall Length 2 (ft):	0.0	0.0
Wall Length 3 (ft):	0.0	0.0
Wall Length 4 (ft):	0.0	0.0
Wall Length 5 (ft):	0.0	0.0
SHEARWALL RIGIDITY DESIGN:		
Wall 1 Rigidity K_i (kip/in):	13.50	10.63
Wall 2 Rigidity K_i (kip/in):		
Wall 3 Rigidity K_i (kip/in):		
Wall 4 Rigidity K_i (kip/in):		
Wall 5 Rigidity K_i (kip/in):		
NAILING DESIGN BASED ON SDPWS SECTION 4.3.4 CAPACITY ADJ:		
Wall 1 Design Shear (plf):	441	463
Sec. 4.3.4.2 Capacity Reduction	*1.00*	*1.00*
Wall 2 Design Shear (plf):		
Sec. 4.3.4.2 Capacity Reduction		
Wall 3 Design Shear (plf):		
Sec. 4.3.4.2 Capacity Reduction		
Wall 4 Design Shear (plf):		
Sec. 4.3.4.2 Capacity Reduction		
Wall 5 Design Shear (plf):		
Sec. 4.3.4.2 Capacity Reduction		
Shear Capacity (plf):	490	490
Shear Designation #:	**Type 3**	**Type 3**
REDUNDANCY FACTOR ANALYSIS (ASCE 7-16 SECTION 12.3.4):		
Wall 1 Capacity (%):		0.45
Wall 2 Capacity (%):		
Wall 3 Capacity (%):		
Wall 4 Capacity (%):		
Wall 5 Capacity (%):		
Redundancy Factor:	**Use 1.0**	**Use 1.3**

TOWN OF DANVILLE USE ONLY

SHEARWALL DESIGN (CONT.): ROOF LEVEL

SHEAR LINE ID:	A	B
SHEARWALL OVERTURNING DESIGN:		
Wall Height (ft):	10.1	10.1
Wall Weight (psf):	17.0	17.0
Roof Trib. Width (ft):	0	0
Roof Weight (psf):	22.0	22.0
SEISMIC UPLIFT FORCE (lb): Load Combo (ASCE 7-16): (0.6-0.14*SDS)D+0.7E		
Wall Dead Load (plf):	55	55
Wall 1 Uplift (lb):	4130	4404
Wall 2 Uplift (lb):		
Wall 3 Uplift (lb):		
Wall 4 Uplift (lb):		
Wall 5 Uplift (lb):		
WIND UPLIFT FORCE (lb): Load Combo (ASCE 7-16): 0.6D+0.6W		
Wall Dead Load (plf):	103	103
Wall 1 Uplift (lb):	541	882
Wall 2 Uplift (lb):		
Wall 3 Uplift (lb):		
Wall 4 Uplift (lb):		
Wall 5 Uplift (lb):		
HOLDOWN TYPE:		
Wall 1 Holdown Type:	HDU5	HDU5
Wall 2 Holdown Type:		
Wall 3 Holdown Type:		
Wall 4 Holdown Type:		
Wall 5 Holdown Type:		
STORY DRIFT CHECK (C_d=4): Due to approximate nature of rigidity calculation methods, +/- 10% variation OK.		
Wall 1 Defl. Check (in):	2.0	2.2
Wall 2 Defl. Check (in):		
Wall 3 Defl. Check (in):		
Wall 4 Defl. Check (in):		
Wall 5 Defl. Check (in):		
Wall 1 Drift Check (in):	OK	OK
Wall 1 Drift Check (in):		
Wall 1 Drift Check (in):		
Wall 1 Drift Check (in):		
Wall 5 Drift Check (in):		

AREA VERIFICATION CHECK:

Seismic Trib Area Sum: 842 sq ft Trib Width Sum: 32 ft

TOWN OF DANVILLE USE ONLY

PROJECT:	**Town of Danville Studio ADU**				
CLIENT:	Town of Danville				
JOB NO.:	W021420	**CALCS BY:**	J. Peek	**DATE:**	3/24/2023

ROOF DIAPHRAGM DESIGN:

DIMENSIONS:

L = 32 ft

B = 25 ft

B_1 = 0 ft

L_1 = 0 ft

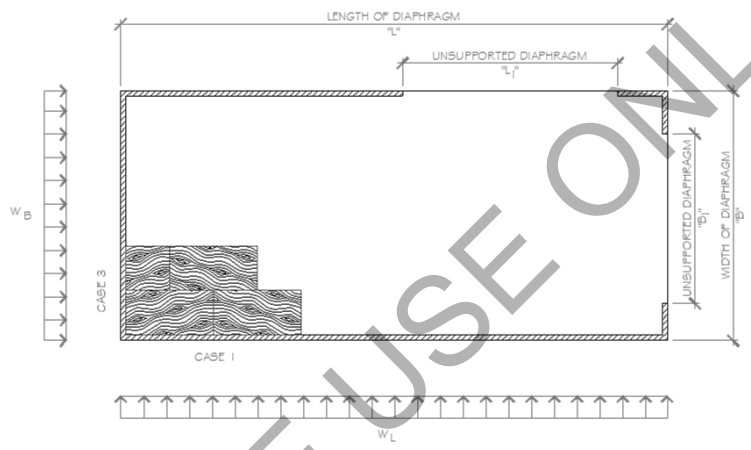

FRAMING MATERIALS:

Plywood Panel Grade	CD, CC
Minimum Nominal Framing Size:	2 x
Nominal Plywood Thickness:	15/32
Common Nail Size:	8 d
Wall framing size:	2x4
Specific Gravity of Framing Members	0.5

LATERAL FORCE ALONG L SIDE:

w_L = 281 plf

LATERAL FORCE ALONG B SIDE:

w_B = 277 plf

ANALYSIS - The diaphragm is considered flexible if its maximum lateral deformation is more than 2x the average shearwall deflection of the associated story.

Diaphragm Ratio: L/B = 1.28 *< 3 Diaphragm OK*

$Shear_{MAX}$ along Side L $V_L = w_B*B/2*L$ = 108 plf

$Shear_{MAX}$ along Side B $V_B = w_L*L/2*B$ = 180 plf

Chord Forces:

Side L: $T_L = C_L = w_L*L^2/8*B$ = 1439 lb *** Min. Blkg Req'd @ 96 in o.c.*

Side B: $T_B = C_B = w_B*B^2/8*L$ = 676 lb *** Min. Blkg Req'd @ 96 in o.c.*

Drag Forces:

Side L: $F_L = V_L*L_1$ = 0 lb *** Min. Strap Req'd - NONE*

Side B: $F_B = V_B*B_1$ = 0 lb *** Min. Strap Req'd - NONE*

DIAPHRAGM DEFLECTION - ** per APA: Supplement For Shearwall and Diaphragms*

$$D = \frac{5vL^3}{8EAb} + \frac{vL}{4Gt} + 0.188Le_n + \frac{S(D_cX)}{2b}$$

Chord Properties:

Area (in²):	5.25	G_Vt_V of ply (lb/in):	83500
E (psi):	1600000	e_n (in)=$(V_n/616)^{3.018}$:	0.045
v (plf):	180	S (D_cX) (in):	2.50

D = 0.37 in D_{ALLOW} = 0.025 * Story Height = 3.7 in ***Deflection OK***

TOWN OF DANVILLE USE ONLY

PROJECT: **Town of Danville Studio ADU**

CLIENT: Town of Danville

JOB NO.: W021420 CALCS BY: **J. Peek** DATE: ***45009***

ROOF DIAPHRAGM DESIGN:

NAILING PATTERN -

Panel Grade	Common Nail	Min. Pen. (in)	Min. Thick. (in)	Member Width (in)	Blocked Nail Spacing				Unblocked	
					Boundary / Other Edges					
					6 / 6	4 / 6	2.5 / 4	2 / 3	Case 1	Others
CD, CC	8 d	1 1/2	15/32	2	270	360	530	600	240	180

DIAPHRAGM NAILING DESIGN - Along Length 'L'

Zone 1: **32 FT WIDE x 25 FT DEEP**

UNBLOCKED 15/32 SHEATHING WITH 8 d COMMON NAILS

6.0 IN O.C. BOUNDARY/ 12 IN O.C. EDGES/ 12 IN O.C. FIELD

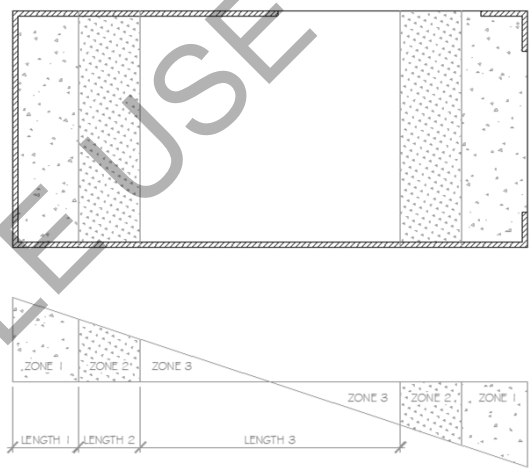

DIAPHRAGM NAILING DESIGN - Along Length 'B'

Zone 1: **25 FT WIDE x 32 FT DEEP**

UNBLOCKED 15/32 SHEATHING WITH 8 d COMMON NAILS

6.0 IN O.C. BOUNDARY/ 12 IN O.C. EDGES/ 12 IN O.C. FIELD

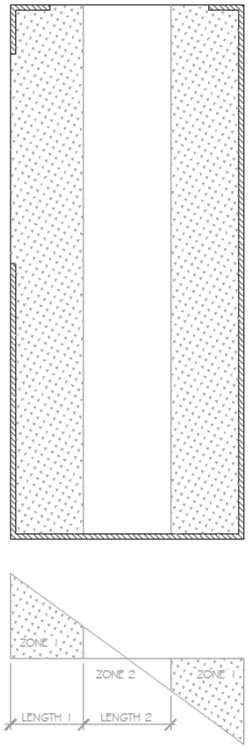

TOWN OF DANVILLE USE ONLY

Software copyright ENERCALC, INC. 1983-2020, Build:12.20.6.27

DESCRIPTION: Typical Header

CODE REFERENCES

Calculations per NDS 2018, IBC 2018, CBC 2019, ASCE 7-16
Load Combination Set : ASCE 7-16

Material Properties

Analysis Method :	Allowable Stress Design	Fb +	1,350.0 psi	*E : Modulus of Elasticity*	
Load Combination	ASCE 7-16	Fb -	1,350.0 psi	Ebend- xx	1,600.0 ksi
		Fc - Prll	925.0 psi	Eminbend - xx	580.0 ksi
Wood Species	: Douglas Fir-Larch	Fc - Perp	625.0 psi		
Wood Grade	: No.1	Fv	170.0 psi		
		Ft	675.0 psi	Density	31.210 pcf
Beam Bracing	: Beam is Fully Braced against lateral-torsional buckling				

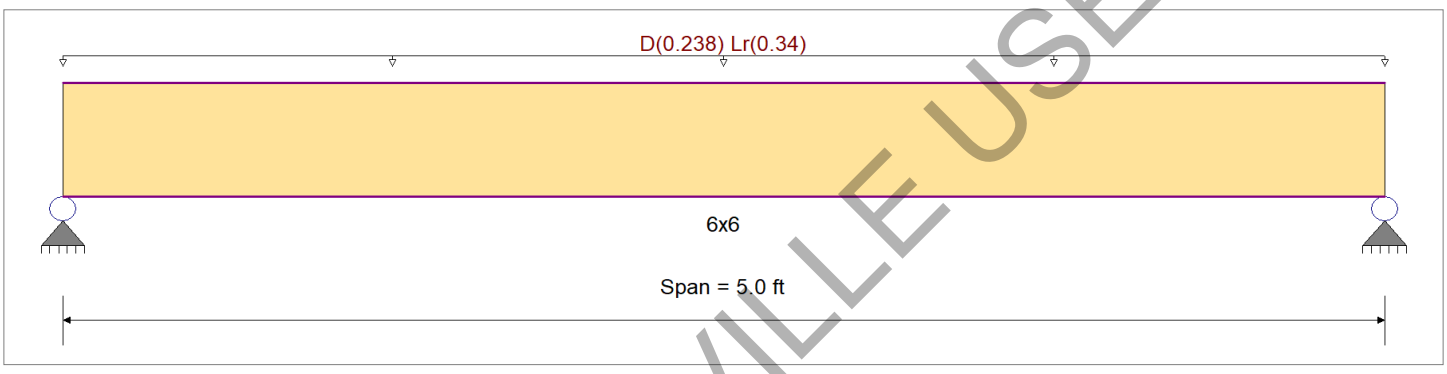

Applied Loads

Service loads entered. Load Factors will be applied for calculations.

Beam self weight calculated and added to loads
Uniform Load : D = 0.0140, Lr = 0.020 ksf, Tributary Width = 17.0 ft

DESIGN SUMMARY

Design OK

Maximum Bending Stress Ratio	=	0.468 : 1	Maximum Shear Stress Ratio	=	0.279 : 1
Section used for this span		6x6	Section used for this span		6x6
	=	790.53 psi		=	59.24 psi
	=	1,687.50 psi		=	212.50 psi
Load Combination		+D+Lr	Load Combination		+D+Lr
Location of maximum on span	=	2.500 ft	Location of maximum on span	=	0.000 ft
Span # where maximum occurs	=	Span # 1	Span # where maximum occurs	=	Span # 1

Maximum Deflection

Max Downward Transient Deflection	0.039 in	Ratio =	1522 >=360
Max Upward Transient Deflection	0.000 in	Ratio =	0 <360
Max Downward Total Deflection	0.068 in	Ratio =	885 >=240
Max Upward Total Deflection	0.000 in	Ratio =	0 <240

Maximum Forces & Stresses for Load Combinations

Load Combination		Max Stress Ratios									Moment Values			Shear Values		
Segment Length	Span #	M	V	C_d	$C_{F/V}$	C_i	C_r	C_m	C_t	C_L	M	fb	F'b	V	fv	F'v
D Only													0.00	0.00	0.00	0.00
Length = 5.0 ft	1	0.272	0.162	0.90	1.000	1.00	1.00	1.00	1.00	1.00	0.76	330.73	1215.00	0.50	24.78	153.00
+D+Lr					1.000	1.00	1.00	1.00	1.00	1.00			0.00	0.00	0.00	0.00
Length = 5.0 ft	1	0.468	0.279	1.25	1.000	1.00	1.00	1.00	1.00	1.00	1.83	790.53	1687.50	1.19	59.24	212.50
+D+0.750Lr					1.000	1.00	1.00	1.00	1.00	1.00			0.00	0.00	0.00	0.00
Length = 5.0 ft	1	0.400	0.238	1.25	1.000	1.00	1.00	1.00	1.00	1.00	1.56	675.58	1687.50	1.02	50.63	212.50
+0.60D					1.000	1.00	1.00	1.00	1.00	1.00			0.00	0.00	0.00	0.00
Length = 5.0 ft	1	0.092	0.055	1.60	1.000	1.00	1.00	1.00	1.00	1.00	0.46	198.44	2160.00	0.30	14.87	272.00

Overall Maximum Deflections

Load Combination	Span	Max. "-" Defl	Location in Span	Load Combination	Max. "+" Defl	Location in Span
+D+Lr	1	0.0678	2.518		0.0000	0.000

TOWN OF DANVILLE USE ONLY

DESCRIPTION: Typical Header

Vertical Reactions

Support notation : Far left is #1 Values in KIPS

Load Combination	Support 1	Support 2
Overall MAXimum	1.461	1.461
Overall MINimum	0.850	0.850
D Only	0.611	0.611
+D+Lr	1.461	1.461
+D+0.750Lr	1.249	1.249
+0.60D	0.367	0.367
Lr Only	0.850	0.850

TOWN OF DANVILLE USE ONLY

DESCRIPTION: B1

CODE REFERENCES

Calculations per NDS 2018, IBC 2018, CBC 2019, ASCE 7-16
Load Combination Set : ASCE 7-16

Material Properties

Analysis Method :	Allowable Stress Design	Fb +	1,350.0 psi	*E : Modulus of Elasticity*	
Load Combination	ASCE 7-16	Fb -	1,350.0 psi	Ebend- xx	1,600.0 ksi
		Fc - Prll	925.0 psi	Eminbend - xx	580.0 ksi
Wood Species	: Douglas Fir-Larch	Fc - Perp	625.0 psi		
Wood Grade	: No.1	Fv	170.0 psi		
		Ft	675.0 psi	Density	31.210 pcf
Beam Bracing	: Beam is Fully Braced against lateral-torsional buckling				

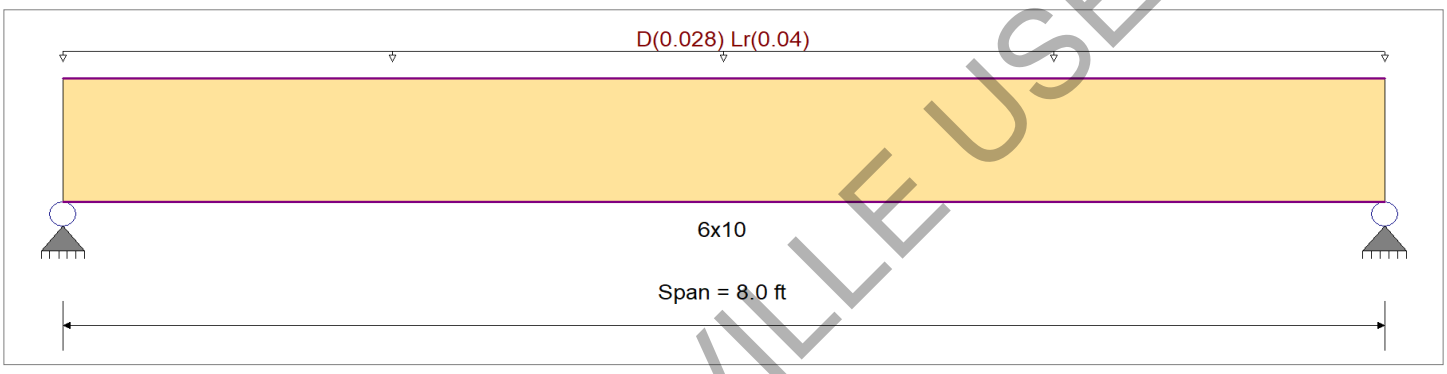

Applied Loads

Service loads entered. Load Factors will be applied for calculations.

Beam self weight calculated and added to loads
Uniform Load : D = 0.0140, Lr = 0.020 ksf, Tributary Width = 2.0 ft

DESIGN SUMMARY

Design OK

Maximum Bending Stress Ratio	=	0.055 : 1	Maximum Shear Stress Ratio	=	0.034 : 1
Section used for this span		6x10	Section used for this span		6x10
	=	92.05 psi		=	7.31 psi
	=	1,687.50 psi		=	212.50 psi
Load Combination		+D+Lr	Load Combination		+D+Lr
Location of maximum on span	=	4.000 ft	Location of maximum on span	=	7.212 ft
Span # where maximum occurs	=	Span # 1	Span # where maximum occurs	=	Span # 1

Maximum Deflection

Max Downward Transient Deflection	0.006 in	Ratio =	16278 >=360
Max Upward Transient Deflection	0.000 in	Ratio =	0 <360
Max Downward Total Deflection	0.012 in	Ratio =	8208 >=240
Max Upward Total Deflection	0.000 in	Ratio =	0 <240

Maximum Forces & Stresses for Load Combinations

Load Combination		Max Stress Ratios									Moment Values			Shear Values		
Segment Length	Span #	M	V	C_d	$C_{F/V}$	C_i	C_r	C_m	C_t	C_L	M	fb	F'b	V	fv	F'v
D Only													0.00	0.00	0.00	0.00
Length = 8.0 ft	1	0.038	0.024	0.90	1.000	1.00	1.00	1.00	1.00	1.00	0.31	45.63	1215.00	0.13	3.63	153.00
+D+Lr					1.000	1.00	1.00	1.00	1.00	1.00			0.00	0.00	0.00	0.00
Length = 8.0 ft	1	0.055	0.034	1.25	1.000	1.00	1.00	1.00	1.00	1.00	0.63	92.05	1687.50	0.25	7.31	212.50
+D+0.750Lr					1.000	1.00	1.00	1.00	1.00	1.00			0.00	0.00	0.00	0.00
Length = 8.0 ft	1	0.048	0.030	1.25	1.000	1.00	1.00	1.00	1.00	1.00	0.55	80.45	1687.50	0.22	6.39	212.50
+0.60D					1.000	1.00	1.00	1.00	1.00	1.00			0.00	0.00	0.00	0.00
Length = 8.0 ft	1	0.013	0.008	1.60	1.000	1.00	1.00	1.00	1.00	1.00	0.19	27.38	2160.00	0.08	2.18	272.00

Overall Maximum Deflections

Load Combination	Span	Max. "-" Defl	Location in Span	Load Combination	Max. "+" Defl	Location in Span
+D+Lr	1	0.0117	4.029		0.0000	0.000

TOWN OF DANVILLE USE ONLY

DESCRIPTION: B1

Vertical Reactions

Support notation : Far left is #1 Values in KIPS

Load Combination	Support 1	Support 2
Overall MAXimum	0.317	0.317
Overall MINimum	0.160	0.160
D Only	0.157	0.157
+D+Lr	0.317	0.317
+D+0.750Lr	0.277	0.277
+0.60D	0.094	0.094
Lr Only	0.160	0.160

TOWN OF DANVILLE USE ONLY

DESCRIPTION: B2

CODE REFERENCES

Calculations per NDS 2018, IBC 2018, CBC 2019, ASCE 7-16
Load Combination Set : ASCE 7-16

Material Properties

Analysis Method : Allowable Stress Design
Load Combination : ASCE 7-16

Wood Species : Douglas Fir-Larch
Wood Grade : No.1

Beam Bracing : Beam is Fully Braced against lateral-torsional buckling

Fb +	1,350.0 psi	*E : Modulus of Elasticity*	
Fb -	1,350.0 psi	Ebend- xx	1,600.0 ksi
Fc - Prll	925.0 psi	Eminbend - xx	580.0 ksi
Fc - Perp	625.0 psi		
Fv	170.0 psi		
Ft	675.0 psi	Density	31.210 pcf

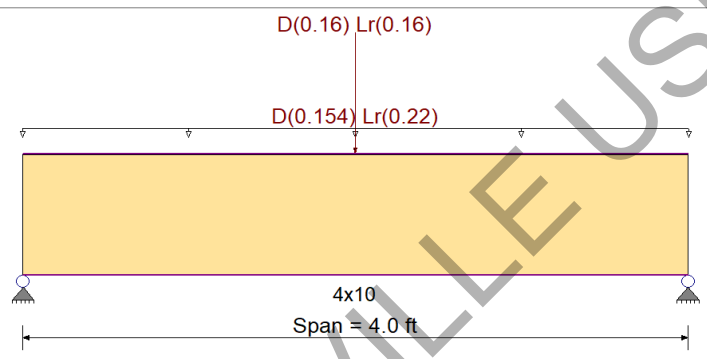

Applied Loads

Service loads entered. Load Factors will be applied for calculations.

Beam self weight calculated and added to loads
Uniform Load : D = 0.0140, Lr = 0.020 ksf, Tributary Width = 11.0 ft
Point Load : D = 0.160, Lr = 0.160 k @ 2.0 ft, (PL FROM B1)

DESIGN SUMMARY

Design OK

Maximum Bending Stress Ratio	=	0.128 : 1	Maximum Shear Stress Ratio	=	0.138 : 1
Section used for this span		4x10	Section used for this span		4x10
	=	260.15 psi		=	29.32 psi
	=	2,025.00 psi		=	212.50 psi
Load Combination		+D+Lr	Load Combination		+D+Lr
Location of maximum on span	=	2.000 ft	Location of maximum on span	=	3.241 ft
Span # where maximum occurs	=	Span # 1	Span # where maximum occurs	=	Span # 1

Maximum Deflection

Max Downward Transient Deflection	0.004 in	Ratio =	10775	>=360
Max Upward Transient Deflection	0.000 in	Ratio =	0	<360
Max Downward Total Deflection	0.008 in	Ratio =	6012	>=240
Max Upward Total Deflection	0.000 in	Ratio =	0	<240

Maximum Forces & Stresses for Load Combinations

Load Combination		Max Stress Ratios									Moment Values			Shear Values		
Segment Length	Span #	M	V	C_d	$C_{F/V}$	C_i	C_r	C_m	C_t	C_L	M	fb	F'b	V	fv	F'v
D Only													0.00	0.00	0.00	0.00
Length = 4.0 ft	1	0.079	0.085	0.90	1.200	1.00	1.00	1.00	1.00	1.00	0.48	115.89	1458.00	0.28	12.96	153.00
+D+Lr					1.200	1.00	1.00	1.00	1.00	1.00			0.00	0.00	0.00	0.00
Length = 4.0 ft	1	0.128	0.138	1.25	1.200	1.00	1.00	1.00	1.00	1.00	1.08	260.15	2025.00	0.63	29.32	212.50
+D+0.750Lr					1.200	1.00	1.00	1.00	1.00	1.00			0.00	0.00	0.00	0.00
Length = 4.0 ft	1	0.111	0.119	1.25	1.200	1.00	1.00	1.00	1.00	1.00	0.93	224.08	2025.00	0.54	25.23	212.50
+0.60D					1.200	1.00	1.00	1.00	1.00	1.00			0.00	0.00	0.00	0.00
Length = 4.0 ft	1	0.027	0.029	1.60	1.200	1.00	1.00	1.00	1.00	1.00	0.29	69.54	2592.00	0.17	7.78	272.00

Overall Maximum Deflections

Load Combination	Span	Max. "-" Defl	Location in Span	Load Combination	Max. "+" Defl	Location in Span
+D+Lr	1	0.0080	2.015		0.0000	0.000

TOWN OF DANVILLE USE ONLY

DESCRIPTION: B2

Vertical Reactions

Support notation : Far left is #1 Values in KIPS

Load Combination	Support 1	Support 2
Overall MAXimum	0.922	0.922
Overall MINimum	0.520	0.520
D Only	0.402	0.402
+D+Lr	0.922	0.922
+D+0.750Lr	0.792	0.792
+0.60D	0.241	0.241
Lr Only	0.520	0.520

TOWN OF DANVILLE USE ONLY

DESCRIPTION: B3

CODE REFERENCES

Calculations per NDS 2018, IBC 2018, CBC 2019, ASCE 7-16
Load Combination Set : ASCE 7-16

Material Properties

Analysis Method : Allowable Stress Design
Load Combination : ASCE 7-16

Wood Species : Douglas Fir-Larch
Wood Grade : No.1

Beam Bracing : Beam is Fully Braced against lateral-torsional buckling

Fb +	1,350.0 psi	*E : Modulus of Elasticity*	
Fb -	1,350.0 psi	Ebend- xx	1,600.0 ksi
Fc - Prll	925.0 psi	Eminbend - xx	580.0 ksi
Fc - Perp	625.0 psi		
Fv	170.0 psi		
Ft	675.0 psi	Density	31.210 pcf

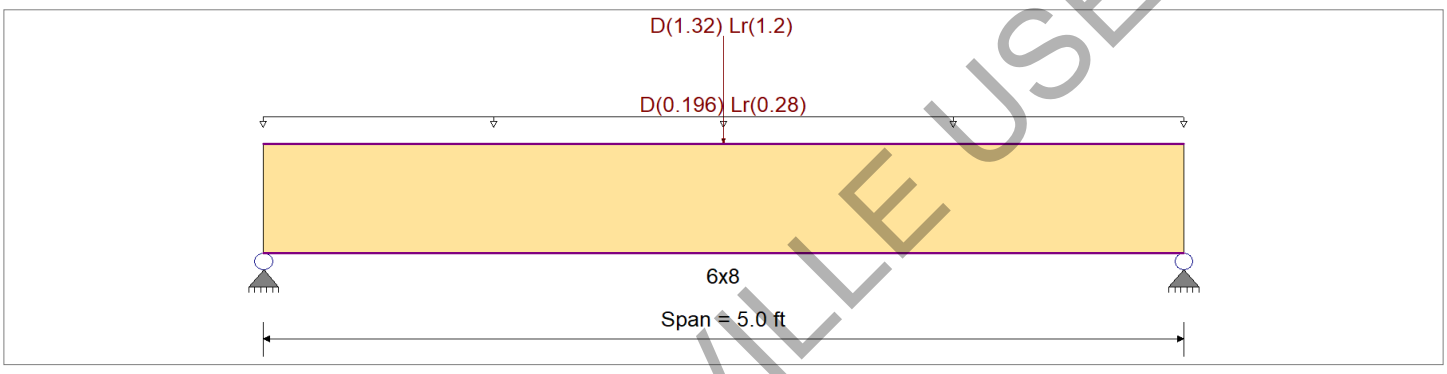

Applied Loads

Service loads entered. Load Factors will be applied for calculations.

Beam self weight calculated and added to loads
Uniform Load : D = 0.0140, Lr = 0.020 ksf, Tributary Width = 14.0 ft
Point Load : D = 1.320, Lr = 1.20 k @ 2.50 ft, (PL From G.T.)

DESIGN SUMMARY

Design OK

Maximum Bending Stress Ratio	=	0.643 : 1	Maximum Shear Stress Ratio	=	0.372 : 1
Section used for this span		6x8	Section used for this span		6x8
	=	1,085.77 psi		=	78.96 psi
	=	1,687.50 psi		=	212.50 psi
Load Combination		+D+Lr	Load Combination		+D+Lr
Location of maximum on span	=	2.500 ft	Location of maximum on span	=	0.000 ft
Span # where maximum occurs	=	Span # 1	Span # where maximum occurs	=	Span # 1

Maximum Deflection

Max Downward Transient Deflection	0.030 in	Ratio =	1976 >=360
Max Upward Transient Deflection	0.000 in	Ratio =	0 <360
Max Downward Total Deflection	0.059 in	Ratio =	1016 >=240
Max Upward Total Deflection	0.000 in	Ratio =	0 <240

Maximum Forces & Stresses for Load Combinations

Load Combination / Segment Length	Span #	Max Stress Ratios M	Max Stress Ratios V	C_d	$C_{F/V}$	C_i	C_r	C_m	C_t	C_L	Moment Values M	Moment Values fb	Moment Values F'b	Shear Values V	Shear Values fv	Shear Values F'v
D Only													0.00	0.00	0.00	0.00
Length = 5.0 ft	1	0.439	0.248	0.90	1.000	1.00	1.00	1.00	1.00	1.00	2.29	533.05	1215.00	1.05	38.01	153.00
+D+Lr					1.000	1.00	1.00	1.00	1.00	1.00			0.00	0.00	0.00	0.00
Length = 5.0 ft	1	0.643	0.372	1.25	1.000	1.00	1.00	1.00	1.00	1.00	4.67	1,085.77	1687.50	2.17	78.96	212.50
+D+0.750Lr					1.000	1.00	1.00	1.00	1.00	1.00			0.00	0.00	0.00	0.00
Length = 5.0 ft	1	0.562	0.323	1.25	1.000	1.00	1.00	1.00	1.00	1.00	4.07	947.59	1687.50	1.89	68.72	212.50
+0.60D					1.000	1.00	1.00	1.00	1.00	1.00			0.00	0.00	0.00	0.00
Length = 5.0 ft	1	0.148	0.084	1.60	1.000	1.00	1.00	1.00	1.00	1.00	1.37	319.83	2160.00	0.63	22.80	272.00

Overall Maximum Deflections

Load Combination	Span	Max. "-" Defl	Location in Span	Load Combination	Max. "+" Defl	Location in Span
+D+Lr	1	0.0590	2.518		0.0000	0.000

TOWN OF DANVILLE USE ONLY

DESCRIPTION: B3

Vertical Reactions

Support notation : Far left is #1 Values in KIPS

Load Combination	Support 1	Support 2
Overall MAXimum	2.472	2.472
Overall MINimum	1.300	1.300
D Only	1.172	1.172
+D+Lr	2.472	2.472
+D+0.750Lr	2.147	2.147
+0.60D	0.703	0.703
Lr Only	1.300	1.300

TOWN OF DANVILLE USE ONLY

Software copyright ENERCALC, INC. 1983-2020, Build:12.20.6.27

DESCRIPTION: 6x6 POST

Code References

Calculations per NDS 2018, IBC 2018, CBC 2019, ASCE 7-16
Load Combinations Used : ASCE 7-16

General Information

Analysis Method :	Allowable Stress Design	Wood Section Name	6x6
End Fixities	Top & Bottom Pinned	Wood Grading/Manuf.	Graded Lumber
Overall Column Height	9 ft	Wood Member Type	Sawn
(Used for non-slender calculations)			
Wood Species	Douglas Fir-Larch	Exact Width	5.50 in
Wood Grade	No.2	Exact Depth	5.50 in
Fb +	750.0 psi	Fv	170.0 psi
Fb -	750.0 psi	Ft	475.0 psi
Fc - Prll	700.0 psi	Density	31.210 pcf
Fc - Perp	625.0 psi		

Area	30.250 in^2
Ix	76.255 in^4
Iy	76.255 in^4
Incising Factors :	
for Bending	0.80
for Elastic Modulus	0.95

Allow Stress Modification Factors

Cf or Cv for Bending	1.0
Cf or Cv for Compression	1.0
Cf or Cv for Tension	1.0
Cm : Wet Use Factor	1.0
Ct : Temperature Factor	1.0
Cfu : Flat Use Factor	1.0
Kf : Built-up columns	1.0 NDS 15.3.2
Use Cr : Repetitive ?	No

E : Modulus of Elasticity . . .

	x-x Bending	y-y Bending	Axial
Basic	1,300.0	1,300.0	1,300.0 ksi
Minimum	470.0	470.0	

Brace condition for deflection (buckling) along columns :
X-X (width) axis : Unbraced Length for buckling ABOUT Y-Y Axis = 9 ft, K = 1.0
Y-Y (depth) axis : Unbraced Length for buckling ABOUT X-X Axis = 9 ft, K = 1.0

Applied Loads

Service loads entered. Load Factors will be applied for calculations.

Column self weight included : 59.006 lbs * Dead Load Factor
AXIAL LOADS . . .
Axial Load at 9.0 ft, D = 0.660, Lr = 0.820 k

DESIGN SUMMARY

Bending & Shear Check Results

PASS Max. Axial+Bending Stress Ratio = **0.09102** : 1

Load Combination	+D+Lr
Governing NDS Forumla	Comp Only, fc/Fc'
Location of max.above base	0.0 ft
At maximum location values are . . .	
Applied Axial	1.539 k
Applied Mx	0.0 k-ft
Applied My	0.0 k-ft
Fc : Allowable	558.95 psi

PASS Maximum Shear Stress Ratio = **0.0** : 1

Load Combination	+0.60D
Location of max.above base	9.0 ft
Applied Design Shear	0.0 psi
Allowable Shear	217.60 psi

Maximum SERVICE Lateral Load Reactions . .

Top along Y-Y	0.0 k	Bottom along Y-Y	0.0 k
Top along X-X	0.0 k	Bottom along X-X	0.0 k

Maximum SERVICE Load Lateral Deflections . . .

Along Y-Y 0.0 in at 0.0 ft above base
for load combination : n/a

Along X-X 0.0 in at 0.0 ft above base
for load combination : n/a

Other Factors used to calculate allowable stresses . . .

	Bending	Compression	Tension

Load Combination Results

Load Combination	C_D	C_P	Maximum Axial + Bending Stress Ratios: Stress Ratio	Status	Location	Maximum Shear Ratios: Stress Ratio	Status	Location
D Only	0.900	0.866	0.05444	PASS	0.0 ft	0.0	PASS	9.0 ft
+D+Lr	1.250	0.799	0.09102	PASS	0.0 ft	0.0	PASS	9.0 ft
+D+0.750Lr	1.250	0.799	0.07890	PASS	0.0 ft	0.0	PASS	9.0 ft
+0.60D	1.600	0.728	0.02186	PASS	0.0 ft	0.0	PASS	9.0 ft

Maximum Reactions

Note: Only non-zero reactions are listed.

Load Combination	X-X Axis Reaction k @ Base	@ Top	Y-Y Axis Reaction k @ Base	@ Top	Axial Reaction @ Base	My - End Moments k-ft @ Base	@ Top	Mx - End Moments @ Base	@ Top
D Only					0.719				
+D+Lr					1.539				
+D+0.750Lr					1.334				

TOWN OF DANVILLE USE ONLY

Wood Column

File: W021420 - Town of Danville ADU_Enercalc (Studio).ec6
Software copyright ENERCALC, INC. 1983-2020, Build:12.20.6.27

Lic. # : KW-06006640 DP ADVANCED ENGINEERING INC.

DESCRIPTION: 6x6 POST

Maximum Reactions

Note: Only non-zero reactions are listed.

Load Combination	X-X Axis Reaction @ Base	X-X Axis Reaction @ Top	k	Y-Y Axis Reaction @ Base	Y-Y Axis Reaction @ Top	Axial Reaction @ Base	My - End Moments @ Base	My - End Moments @ Top	k-ft	Mx - End Moments @ Base	Mx - End Moments @ Top
+0.60D						0.431					
Lr Only						0.820					

Maximum Deflections for Load Combinations

Load Combination	Max. X-X Deflection		Distance		Max. Y-Y Deflection		Distance	
D Only	0.0000	in	0.000	ft	0.0000	in	0.000	ft
+D+Lr	0.0000	in	0.000	ft	0.0000	in	0.000	ft
+D+0.750Lr	0.0000	in	0.000	ft	0.0000	in	0.000	ft
+0.60D	0.0000	in	0.000	ft	0.0000	in	0.000	ft
Lr Only	0.0000	in	0.000	ft	0.0000	in	0.000	ft

Sketches

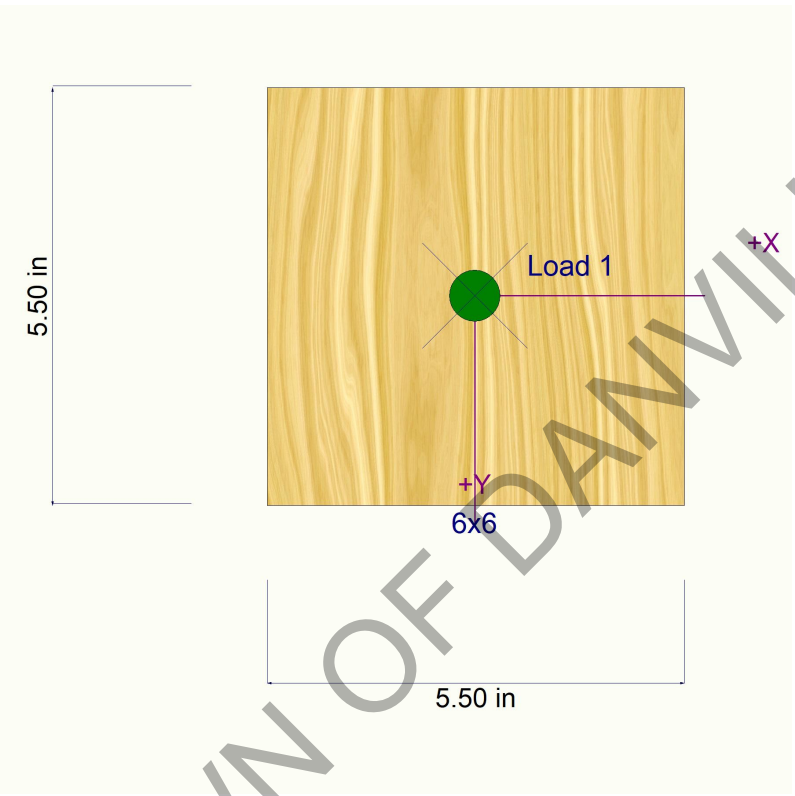

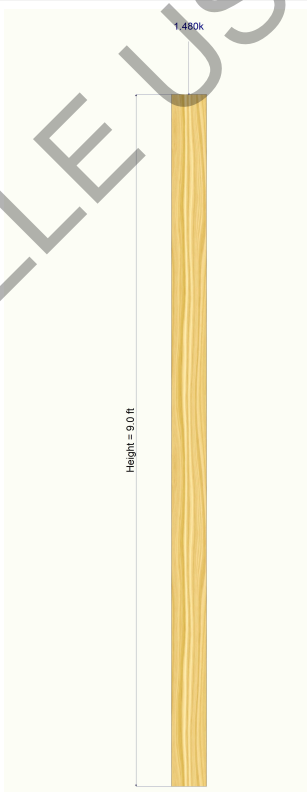

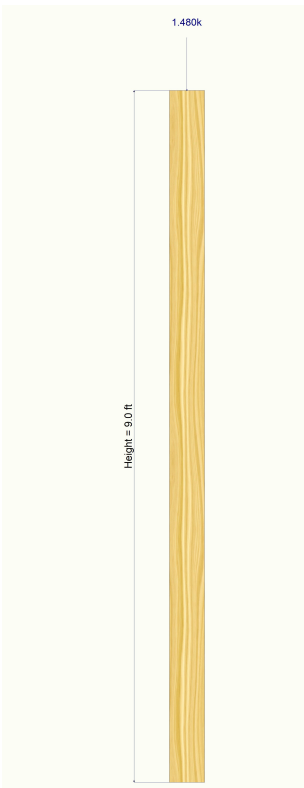

TOWN OF DANVILLE USE ONLY

PROJECT: **Town of Danville Studio ADU**

CLIENT: Town of Danville

JOB NO.: W021420 **CALCS BY:** J. Peek **DATE:** 3/24/2023

SPREAD FOOTING FOUNDATION ANALYSIS:

Allowable Stress:
fy (ksi): 60
f'c (psi): 2500

Footing Reinf:
(2) #4 in Top
(2) #4 in Bottom

As used: 0.4

Grid Line:	***1***	***2***	***A***	***B***
Footing Design Criteria:				
Allow. Bearing Pres. (psf):	1500	1500	1500	1500
Footing Width (in):	12	12	12	12
Footing Depth (in):	18	18	18	18
Unsupported Length (ft):	5.0	5.0	5.0	5.0
Uniform Loads:				
Roof Trib (ft)	11.0	13.0	17.0	17.0
Roof DL (psf)	22.0	22.0	22.0	22.0
Roof LL (psf)	20.0	20.0	20.0	20.0
Floor Trib (ft)	0.0	0.0	0.0	0.0
Floor DL (psf)	15.0	15.0	15.0	15.0
Floor LL (psf)	40.0	40.0	40.0	40.0
Lower Floor Trib (ft)	0.0	0.0	0.0	0.0
Lower Floor DL (psf)	15.0	15.0	15.0	15.0
Lower Floor LL (psf)	40.0	40.0	40.0	40.0
Deck Trib (ft)	0.0	0.0	0.0	0.0
Deck DL (psf)	15.0	15.0	15.0	15.0
Deck LL (psf)	60.0	60.0	60.0	60.0
Wall Trib (ft)	10.0	10.0	10.0	10.0
Wall DL (psf)	17.0	17.0	17.0	17.0
TOTAL DL (plf):	**412**	**456**	**544**	**544**
TOTAL Lr (plf):	**220**	**260**	**340**	**340**
TOTAL LL (plf):	**0**	**0**	**0**	**0**
Point Load:				
Max. Point DL (lbs)	1320	1320	0	0
Max. Point Lr (lbs)	1200	1200	0	0
Max. Point LL (lbs)	0	0	0	0
Max. HD Load (lbs)	1881	3521	4130	4404
Soil Analysis:				
q (psf):	1247	1331	723	771
q/ q_{ALLOW}:	0.83	0.89	0.48	0.51
M_{max} (ft-lb):	7026 ft-lb	7391 ft-lb	5417 ft-lb	5674 ft-lb
V_{max} (lb):	3869 lbs	4161 lbs	2993 lbs	2993 lbs
Allowable M_{max} (ft-lb):	25253 ft-lb	25253 ft-lb	25253 ft-lb	25253 ft-lb
Allowable V_{max} (lb):	7395 lbs	7395 lbs	7395 lbs	7395 lbs
Footing A(s) req'd:	0.40	0.40	0.40	0.40
	O.K.	**O.K.**	**O.K.**	**O.K.**

TOWN OF DANVILLE USE ONLY

PROJECT: **Town of Danville Studio ADU**

CLIENT: Town of Danville

JOB NO.: W021420 **CALCS BY:** J. Peek **DATE:** 3/24/2023

PIER AND GRADE BEAM FOUNDATION ANALYSIS:

Allowable Stress:
fy (ksi): 60
f'c (psi): 2500

Grade Beam Reinf:
(3) #5 in Top
(3) #5 in Bottom

As used: 0.93

Grid Line:	***1***	***2***	***A***	***B***
Pier Design Criteria:				
Allow. Skin Friction (psf):	250	250	250	250
Pier Diameter (in):	16	16	16	16
Neglect Pier Depth (ft):	2	2	2	2
Grade Beam Design Criteria:				
Grade Beam Width (in):	12	12	12	12
Grade Beam Depth (in):	18	18	18	18
Grade Beam Span (ft):	8.0	8.0	8.0	8.0
Uniform Loads:				
Roof Trib (ft)	11.0	13.0	17.0	17.0
Roof DL (psf)	22.0	22.0	22.0	22.0
Roof LL (psf)	20.0	20.0	20.0	20.0
Floor Trib (ft)	0.0	0.0	0.0	0.0
Floor DL (psf)	15.0	15.0	15.0	15.0
Floor LL (psf)	40.0	40.0	40.0	40.0
Lower Floor Trib (ft)	0.0	0.0	0.0	0.0
Lower Floor DL (psf)	15.0	15.0	15.0	15.0
Lower Floor LL (psf)	40.0	40.0	40.0	40.0
Deck Trib (ft)	0.0	0.0	0.0	0.0
Deck DL (psf)	15.0	15.0	15.0	15.0
Deck LL (psf)	60.0	60.0	60.0	60.0
Wall Trib (ft)	10.0	10.0	10.0	10.0
Wall DL (psf)	17.0	17.0	17.0	17.0
TOTAL DL (plf):	**637**	**681**	**769**	**769**
TOTAL Lr (plf):	**220**	**260**	**340**	**340**
TOTAL LL (plf):	**0**	**0**	**0**	**0**
Point Load:				
Max. Point DL (lbs)	1320	1320	0	0
Max. Point Lr (lbs)	1200	1200	0	0
Max. Point LL (lbs)	0	0	0	0
Max. HD Load (lbs)	1881	3521	4130	4404
Grade Beam Analysis:				
M_{max} (ft-lb):	15942 ft-lb	16877 ft-lb	11764 ft-lb	12176 ft-lb
V_{max} (lb):	6219 lbs	6686 lbs	5869 lbs	5869 lbs
Allowable M_{max} (ft-lb):	56104 ft-lb	56104 ft-lb	56104 ft-lb	56104 ft-lb
Allowable V_{max} (lb):	7395 lbs	7395 lbs	7395 lbs	7395 lbs
Grade Beam A(s) req'd:	0.93	0.93	0.93	0.93
	O.K.	**O.K.**	**O.K.**	**O.K.**
Pier Analysis:				
Design Pier Load (lbs):	9378	10051	8875	8875
Req'd Pier Depth (ft)	10.96	11.60	10.48	10.48
Use Pier Depth (ft):	**11**	**12**	**11**	**11**

TOWN OF DANVILLE USE ONLY